36V, 3A Synchronous Step-down Voltage Converter

Features

- Wide Input Voltage from 4.3V to 36V
- Adjustable Output Voltage 1V to 24V
- Up to 3A Output Current
- Switching Frequency of 400KHz
- 75-mΩ/50-mΩ RDS-ON power MOSFETs
- Peak-current-mode control
- Junction temperature range –40°C to +125°C
- Spread Spectrum for Low EMI
- Integrated compensation network
- Peak Efficiency Up to 95%
- Low operating quiescent current of 40 μA
- RoHS Compliant

Product Description

The LPD33630 regulator is an easy-to-use, synchronous, step-down DC/DC converter that delivers high efficiency for industrial applications. The LPD33630 drives up to 3 A of load current from an input of up to 36V.

The LPD33630 provides high light load efficiency and output accuracy in a very small solution size. Integration eliminates most external components and provides a pin out designed for simple PCB layout.

Protection features include thermal shutdown, input under voltage lockout, cycle-by-cycle current limit, and hiccup short-circuit protection. The LPD33630 is available in an QFN package.

Applications

- Motor drive systems: drones, AC inverters, servos
- General purpose wide VIN powers

Pin Configuration

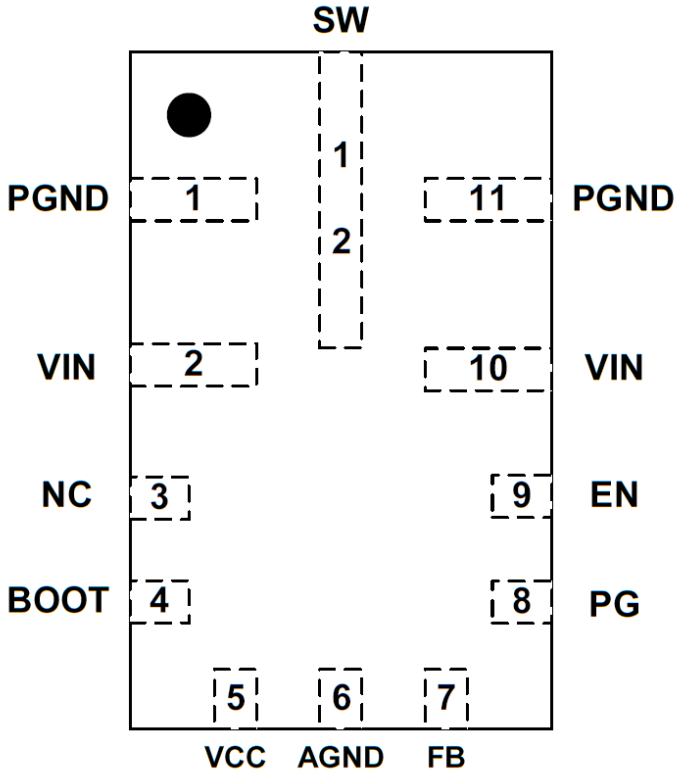

Notice: The information in this document is subject to change without notice.

Ordering Information

Part Number	Package	Shipment
LPD33630-AXB	QFN3*2-12L	Tape & Reel / 3000

*A: Output Voltage Adjustable
*XB: QFN3*2-12L

Marking Information

3S	X	W
Part Number	LFC code	

Part Number	Package	Part Marking	Quantity
GSM3401SZF	SOT-23	dXWMM	3000pcs

Simplified Application Circuit:

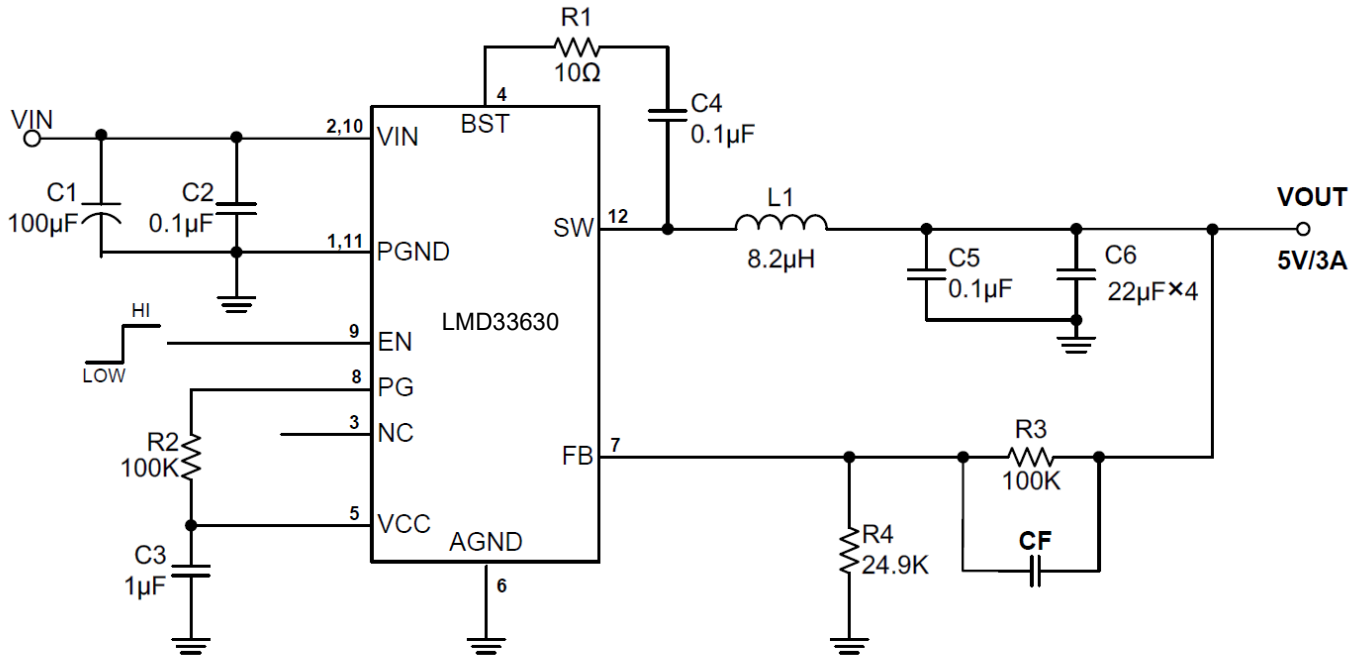

Figure.1 Simplified Application Circuit (400KHZ)

Notice: The information in this document is subject to change without notice.

Pin Function Description:

(T_A=25ºC Unless otherwise noted)

Pin NO.	Pin Name	Pin Description
1、11	PGND	Power ground terminal. Connect to system ground and AGND. Connect to bypass capacitor with short wide traces.
2、10	VIN	Input supply to regulator. Connect a high-quality bypass capacitor or capacitors directly to this pin and PGND.
3	NC	NC pin. Need to tied to ground
4	BOOT	Bootstrap. Boot-strap supply voltage for internal high-side driver. Connect a high-quality 100-nF capacitor from this pin to the SW pin.
5	VCC	Internal 5V LDO output. Used as supply to internal control circuits. Do not connect to external loads. Can be used as logic supply for power-good flag. Connect a high quality 1-μF capacitor from this pin to GND.
6	AGND	Analog ground for regulator and system. Ground reference for internal references and logic. All electrical parameters are measured with respect to this pin. Connect to system ground on PCB.
7	FB	Feedback input to regulator. Connect to tap point of feedback voltage divider. Do not float. Do not ground.
8	PG	Open drain power-good flag output. Connect to suitable voltage supply through a current limiting resistor. High = power OK, low = power bad. Flag pulls low when EN = Low. Can be left open when not used.
9	EN	Enable Input Pin. High = ON, low = OFF. Can be connected directly to VIN; Do not float.
12	SW	Regulator Switch Node. Connect to power inductor.

Notice: The information in this document is subject to change without notice.