LSR2301SD 20V P-Channel MOSFET

Features

- Advanced trench cell design
- Low Thermal Resistance
- Low Gate Charge
- Halogen-Free & Lead-Free

Applications

- Load Switch for Portable Devices
- Voltage controlled small signal switch

Pin Configuration

LSR2301SD(SOT-323)

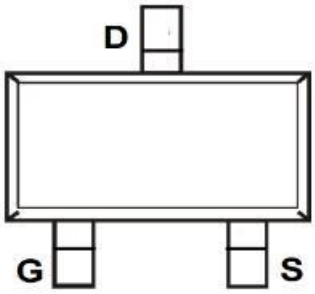

Top View

Pin	Description
1	Gate
2	Source
3	Drain

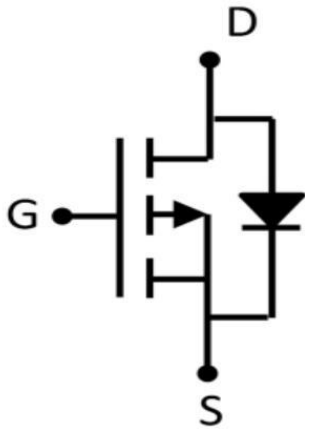

Notice: The information in this document is subject to change without notice.

Marking Information

Part Marking	Part Number
TR1	TR1

Absolute Maximum Ratings

(T_A=25ºC Unless otherwise noted)

Symbol	Parameter	Typical	Unit
V_{DSS}	Drain-Source Voltage	-20	V
V_{GSS}	Gate-Source Voltage	±12	V
I_D	Continuous Drain Current	-1.2	A
I_{DM}	Pulsed Drain Current[1]	-8	A
P_D	Power Dissipation	0.2	W
T_J	Operating Junction Temperature Range	-55 to +150	ºC
T_{STG}	Storage Temperature Range	-55 to +150	ºC
$R_{\theta JA}$	Thermal Resistance-Junction to Ambient[2]	625	ºC/W

Note:
1. Pulse Test: Pulse Width ≦ 300us, Duty Cycle ≦ 2%, Limited by $T_{J(MAX)}$.
2. Device mounted on single sided FR-4 substrate PC board, 2oz copper, with 1-inch square copper plate in still air.

Notice: The information in this document is subject to change without notice.

Electrical Characteristics

(T_A=25ºC Unless otherwise noted)

Symbol	Parameter	Conditions	Min	Typ	Max	Unit
Static						
$V_{(BR)DSS}$	Drain-Source Breakdown Voltage	V_{GS}=0V, I_D=-250uA	-20			V
$V_{GS(th)}$	Gate Threshold Voltage	V_{DS}=V_{GS}, I_D=-250uA	-0.4	-0.7	-1.0	V
I_{GSS}	Gate Leakage Current	V_{DS}=0V, V_{GS}=±12V			±100	nA
I_{DSS}	Zero Gate Voltage Drain Current	V_{DS}=-20V, V_{GS}=0V			-1	uA
$R_{DS(on)}$	Drain-Source On-Resistance	V_{GS}=-4.5V, I_D=-2.5A		80	100	mΩ
		V_{GS}=-2.5V, I_D=-2A		105	140	
Dynamic						
R_g	Gate Resistance	V_{DS}=0V, V_{GS}=0V, f=1MHz		7		Ω
g_{fs}	Forward Transconductance	V_{DS}=-10V, I_D=-0.2A		80		S
C_{iss}	Input Capacitance	V_{DS}=-30V, V_{GS}=0V, f=1MHz		250		pF
C_{oss}	Output Capacitance			65		
C_{rss}	Reverse Transfer Capacitance			30		
Q_g	Total Gate Charge	V_{DS}=-48V, V_{GS}=-10V, I_D=-0.5A		4.9		nC
Q_{gs}	Gate-Source Charge			1.4		
Q_{gd}	Gate-Drain Charge			2.5		
$t_{d(on)}$	Turn-On Time	V_{DS}=-30V, V_{GS}=-10V, I_D=-0.5A, R_g=3.3Ω		6		ns
T_r				15		
$t_{d(off)}$	Turn-Off Time			29		
T_f				9		
Body-Diode						
V_{SD}	Drain-Source Diode Forward Voltage	V_{GS}=0V, I_S=-0.75A			-1.2	V
trr	Body Diode Reverse Recovery Time	I_S=-1A, di/dt=100A/us		5.3		ns
Qrr	Body Diode Reverse Recovery Charge	I_S=-1A, di/dt=100A/us		1.7		nC

Notice: The information in this document is subject to change without notice.

Typical Performance Characteristics

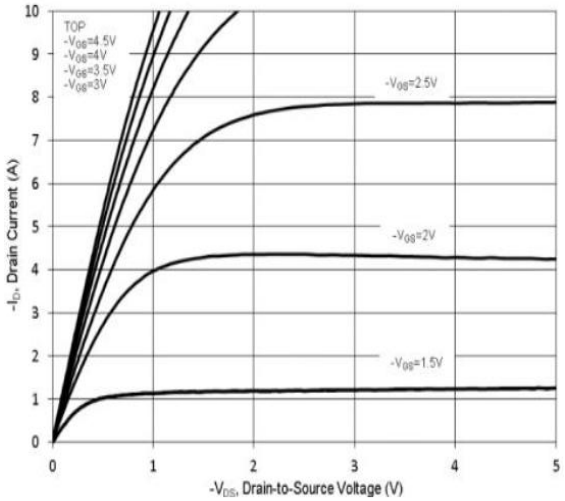

Fig.1 Typical Output Characteristics

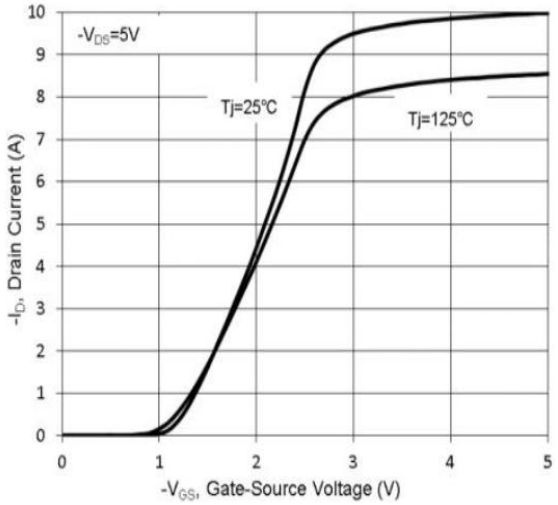

Fig.2 Typical Transfer Characteristics

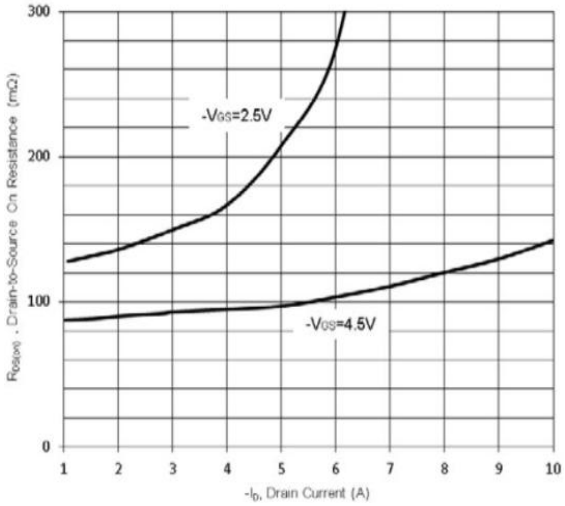

Fig.3 On-Resistance vs. Drain Current

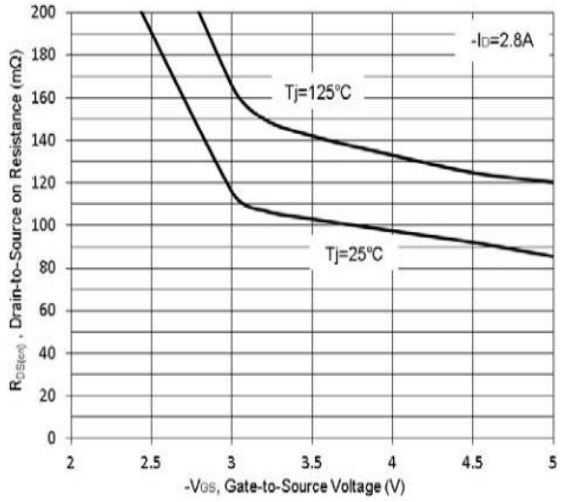

Fig.4 On-Resistance vs. Gate-Source Voltage

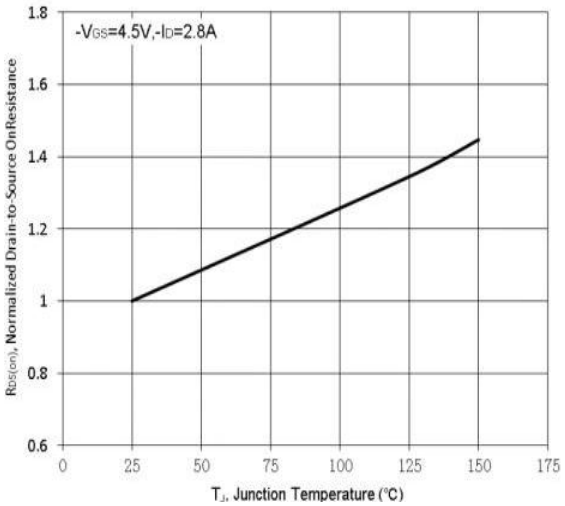

Fig.5 On-Resistance vs. Junction Temperature

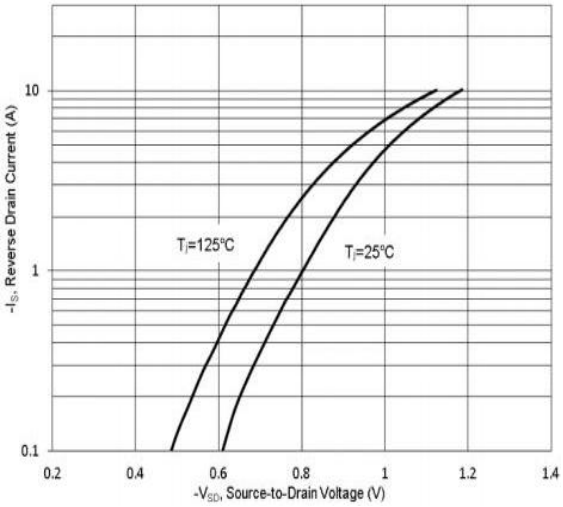

Fig.6 Forward Characteristics of Body Diode

Notice: The information in this document is subject to change without notice.

Typical Performance Characteristics

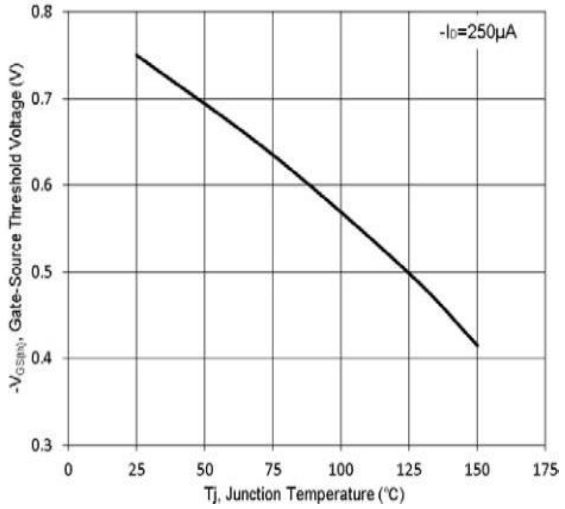

Fig.7 $V_{GS(th)}$ vs. Junction Temperature

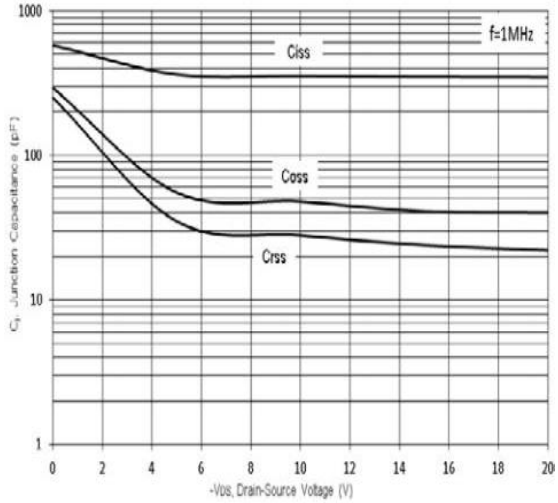

Fig.8 Capacitance Characteristics

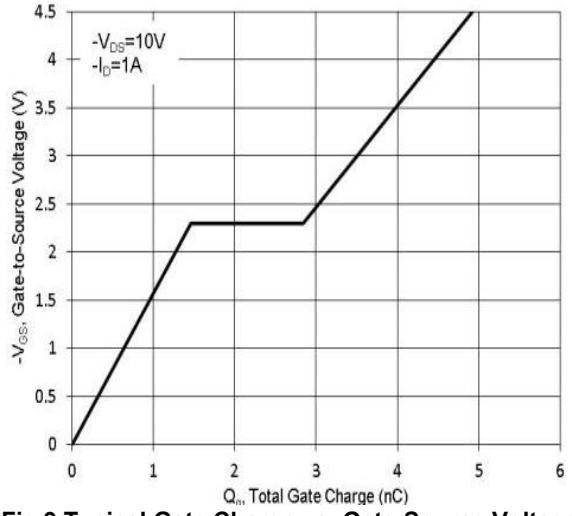

Fig.9 Typical Gate Charge vs. Gate-Source Voltage

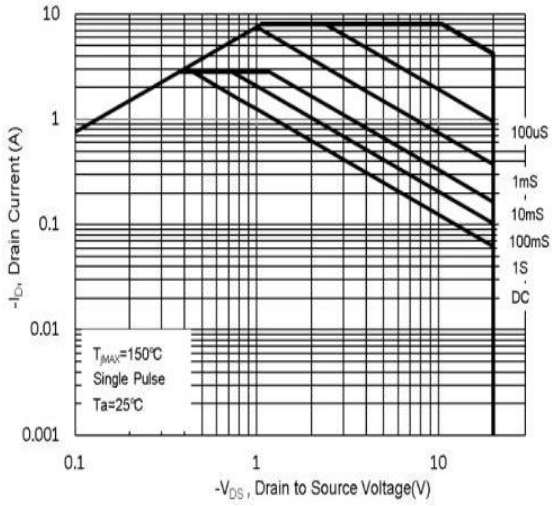

Fig.10 Safe Operating Area

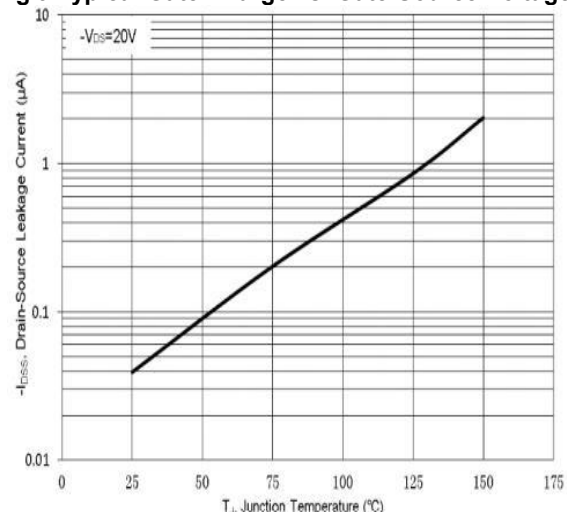

Fig.11 Drain-Source Leakage Current

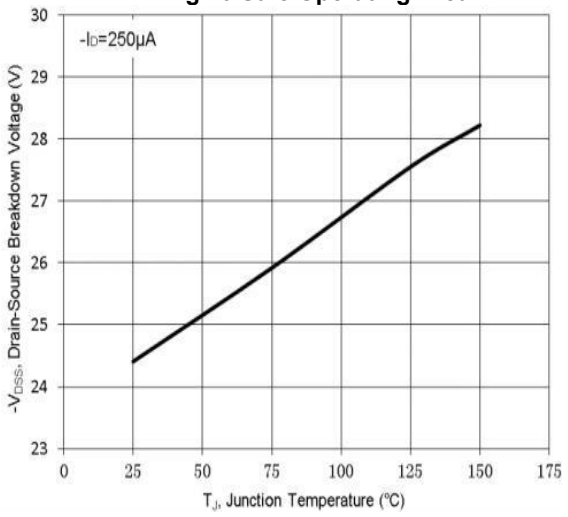

Fig.12 V(BR)DSS vs. Junction Temperature

Notice: The information in this document is subject to change without notice.

Typical Characteristics

Gate Charge Test Circuit & Waveform

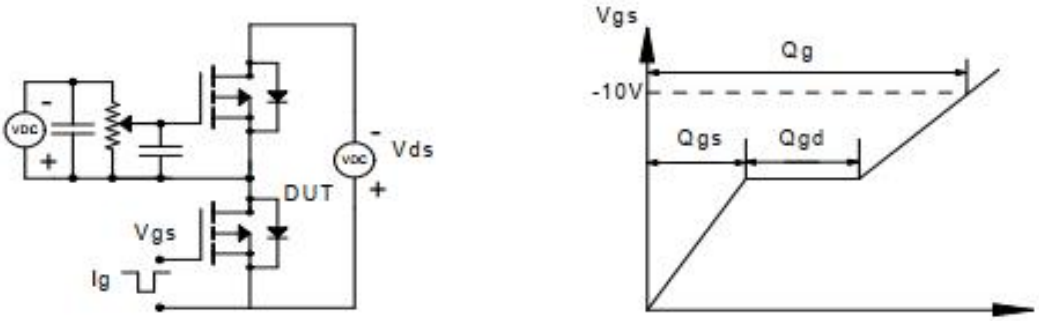

Resistive Switching Test Circuit & Waveforms

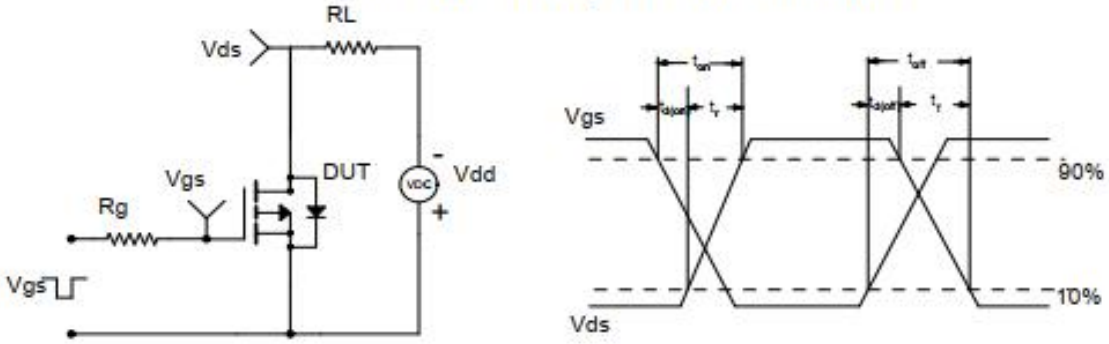

Unclamped Inductive Switching (UIS) Test Circuit & Waveforms

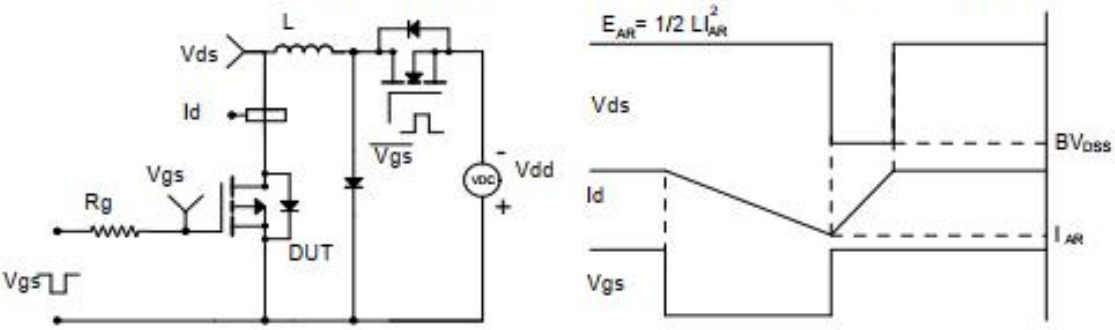

Diode Recovery Test Circuit & Waveforms

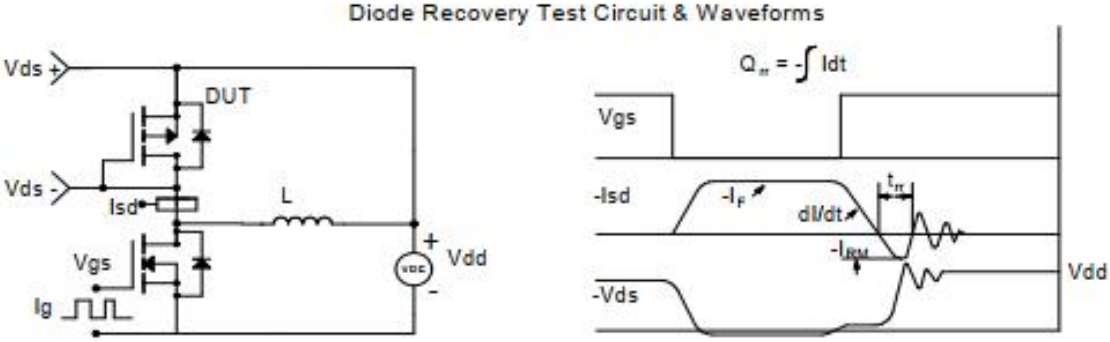

Notice: The information in this document is subject to change without notice.

Package Dimension(Units:mm)

SOT-323

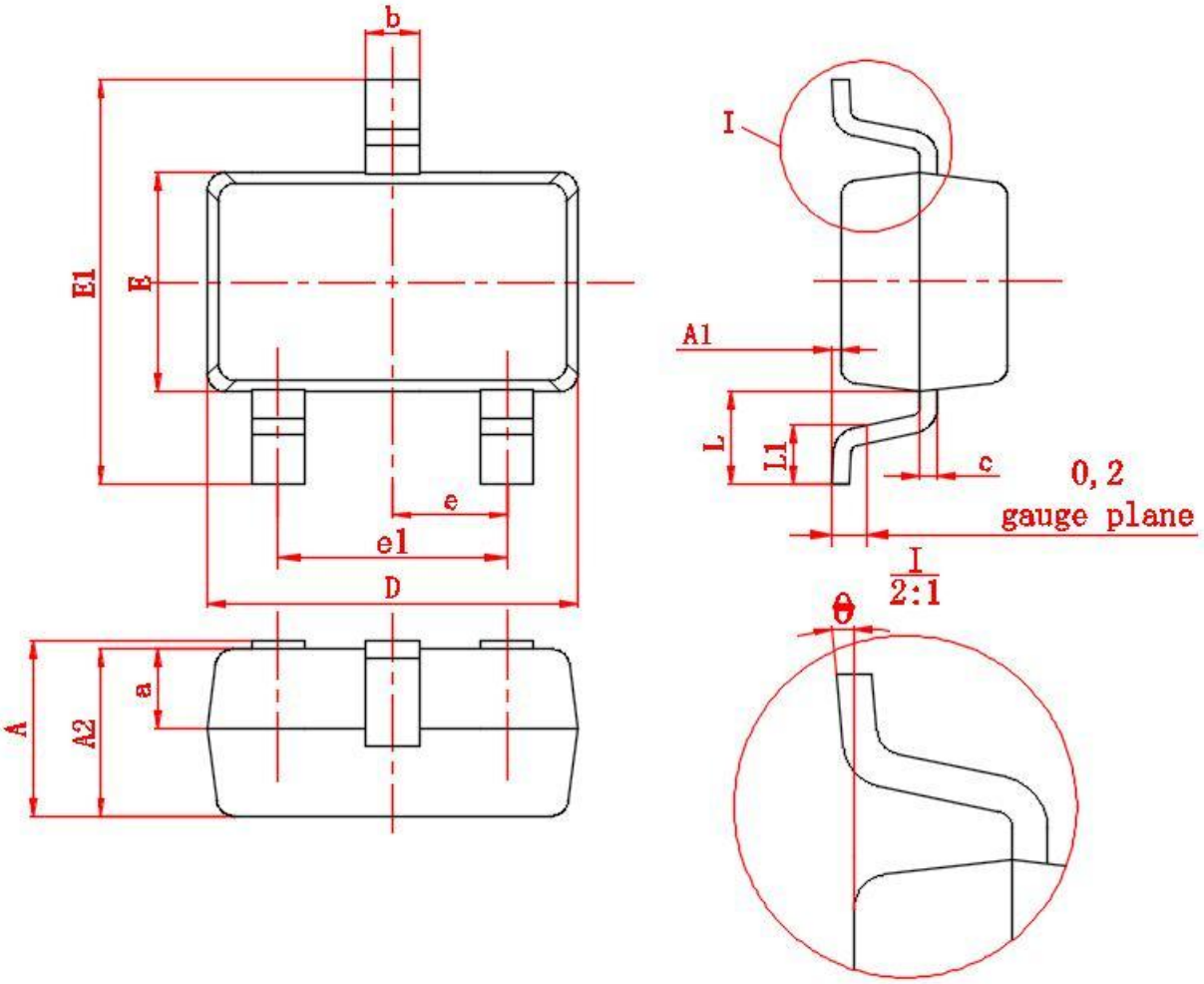

Symbol	Min	Max	Symbol	Min	Max
A	0.90	1.10	**e**	0.65 BSC	
A1	0	0.10	**e1**	1.20	1.40
A2	0.90	1.00	**b**	0.25	0.35
a	0.45 BSC		**c**	0.08	0.15
D	2.00	2.20	**L**	0.525 BSC	
E	1.15	1.35	**L1**	0.26	0.46
E1	2.15	2.45	**θ**	0°	8°

Notice: The information in this document is subject to change without notice.