18V, 3A, 700KHz Synchronous Step-Down DC/DC Converter

Features

- 3A Output Current
- Internal 85mΩ/45mΩ Power MOSFET Switch On-Resistance
- Up to 92% Efficiency
- 700KHz Frequency
- Constant On-Time Operation
- Cycle-by-Cycle Over Current Protection
- Wide 4.5V to 18V Operating Input Range
- Over-Temperature Protection
- Output Adjustable
- Available in SOT23-6 Packages
- ROHS Compliant

Product Description

The LPD6423 is a monolithic step-down switch mode converter with a built-in power MOSFET. It achieves 3A output current over a wide input supply range with excellent load and line regulation. Constant on-time operation provides fast transient response. Fault condition protection includes cycle-by-cycle current limiting and thermal shutdown.

The LPD6423 requires a minimum number of readily available standard external components. The LPD6423 is available in SOT23-6 packages.

Applications

- Set Top Box
- Portable TV
- LCD TV
- AP Router

Pin Configuration

LPD6423 (SOT23-6)

TOP VIEW

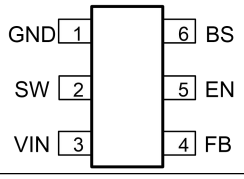

PIN Name	Description
GND	Ground. This pin is the voltage reference for the regulated output voltage. For this reason care must be taken in its layout.
SW	Switch Output. Connect this pin to the switching end of the inductor.
VIN	Power Supply Input. Drive 4.5V to 18V voltage to this pin to power on this chip. Connecting a 10uF~22uF ceramic bypass capacitor between VIN and GND to eliminate noise.
FB	Feedback. An external resistor divider from the output to GND, tapped to the FB pin sets the output voltage.
EN	On/Off Control Input. Pull EN above 1.8V to turn the device on.
BS	Bootstrap. A 100nF capacitor is connected between SW and BS pins to drive the power switch's gate above the supply voltage.

Notice: The information in this document is subject to change without notice.

Typical Application Circuit

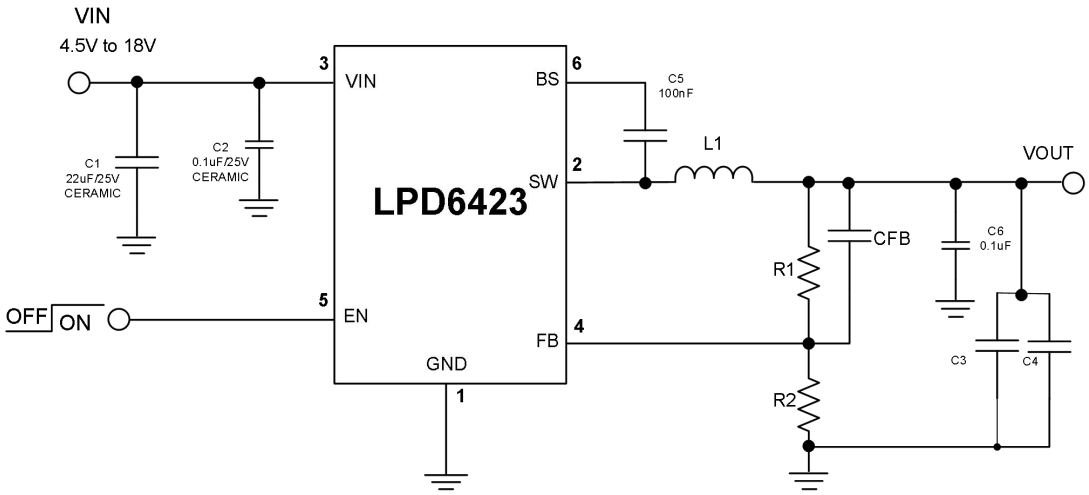

Figure.1 Typical Application Circuit

VOUT	R1	R2	CFB	L1			C3+C4
				Min	Typ	Max	
6.5V	15K	2K	Optional	3.3uH	4.7uH	4.7uH	20uF~68uF Ceramic
5.0V	18.2K	3.3K	Optional	3.3uH	4.7uH	4.7uH	20uF~68uF Ceramic
3.3V	16.6K	5K	Optional	2.2uH	3.3uH	4.7uH	20uF~68uF Ceramic
1.8V	13.6K	10K	Optional	1.5uH	2.2uH	3.3uH	20uF~68uF Ceramic
1V	3.09K	10K	Optional	1.5uH	2.2uH	3.3uH	20uF~68uF Ceramic

Ordering Information

Part Number	Package	Shipment
LPD6423-AAC	SOT23-6	Tape & Reel / 3000

A：Output Voltage Adjustable
AC: Package Type SOT23-6

Notice: The information in this document is subject to change without notice.

Marking Information

Part Number	Package	Product Code
LPD6423-AAC	SOT23-6	6423 XXXX
LPD6423-AAC	SOT23-6	XXXX 0753
LPD6423-AAC	SOT23-6	204 XXXX

XXXX：Date Code

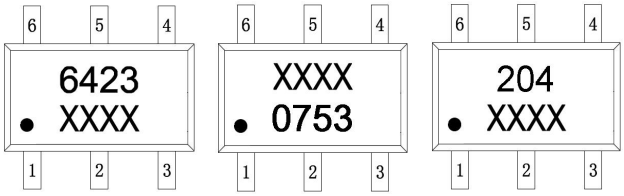

Absolute Maximum Ratings [1]

Symbol	Description	Value	Units
V_{IN}	Input Supply Voltage	-0.3 to 20	V
V_{EN}	EN Voltage	-0.3 to 20	V
V_{SW}	SW Voltage	-0.3 to 20	V
V_{BS}	Boost Voltage	(V_{SW} – 0.3V) to (V_{SW} + 5.8V)	V
V_{FB}	FB Voltage	-0.3 to 5.6	V
T_{LEAD}	Lead Temperature (Soldering 10 sec)	+260	℃
T_j	Maximum Junction Temperature	150	℃
PD	Power Dissipation	0.4	W
	Storage Temperature	-65 to 150	℃
	ESD Classification (HBM)	Class 2	V
Recommended Operating Conditions [2]			
V_{IN}	Input Supply Voltage	4.8V to 18	V
V_{OUT}	Output Voltage	0.8V~0.65 x VIN or 7V Max	V
T_A	Ambient Temperature	-40 ~ 85	℃
Thermal Characteristics			
	SOT23-6, θ_{JA}	88	℃/W
	SOT23-6, θ_{JC}	45	℃/W

Notes:
(1) Stresses exceed those ratings may damage the device. Exposure to absolute maximum rating conditions for extended periods may affect device reliability.
(2) If out of its operation conditions, the device is not guaranteed to function.

Notice: The information in this document is subject to change without notice.

Electrical Characteristics

(V_{IN} = 9V, V_{EN}=2V, T_A = 25℃, unless otherwise specified)

Parameter	Symbol	Test Conditions	Min	Typ	Max	Unit
Input Voltage Range			4.5		18	V
Supply Current (Quiescent)	I_Q	V_{EN} = V_{IN}, no switching		300		μA
Supply Current (Shutdown)		V_{EN} = 0V		3	10	μA
Feedback Voltage	V_{FB}		0.742	0.765	0.788	V
Feedback input Current	I_{FB}	V_{FB} = 1V		0	±0.1	μA
Switch-On High-Side Resistance *	$R_{DSH(ON)}$			85		mΩ
Switch-On Low-Side Resistance *	$R_{DSL(ON)}$			45		mΩ
Switch Leakage		V_{EN} = 0V, V_{SW} = 0V			10	μA
Current Limit *	I_{OC}	DC current, V_{OUT} =1.8V	3.1	4.0		A
Oscillator Frequency	f_{SW}	V_{OUT} = 3.3V@0.8A Load	560	700	880	KHz
Soft-start time	T_{SS}	EN=H, $V_{OUT, No\ LOAD}$ From 0.3V to 3V	0.7	1.3	1.8	mSec
Minimum On-Time *	T_{ON}			150		ns
Minimum Off-Time *	T_{OFF}			250	360	ns
Under Voltage Lockout Threshold		V_{IN} Rising, V_{OUT} = 1V		4.1	4.4	V
Under Voltage Lockout Threshold Hysteresis		V_{OUT} = 1V		250		mV
EN pin resistance to GND	R_{EN}		0.7	1.2	1.8	MΩ
EN Up Threshold Voltage	V_{ENH}		1.8			V
EN Down Threshold Voltage	V_{ENL}				0.4	V
Thermal Shutdown *				150		°C

*: Guaranteed by design.

Electrical Characteristics

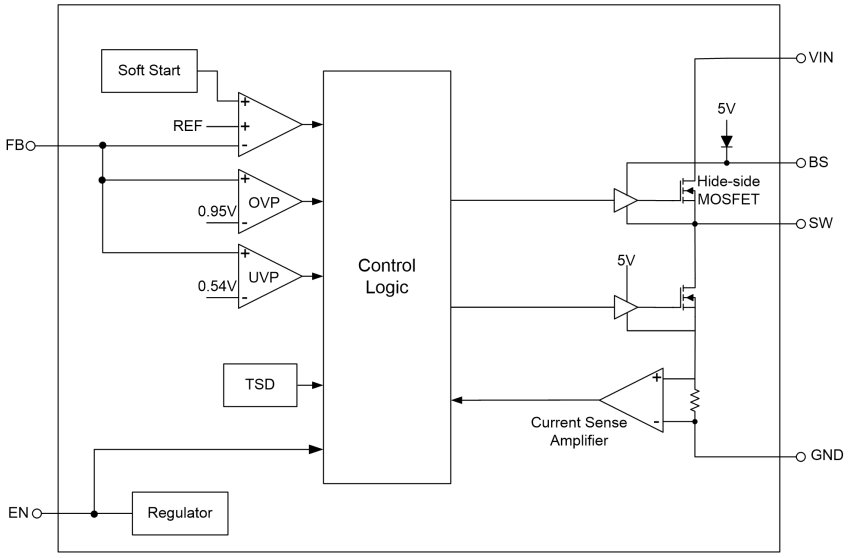

Figure.2 LPD6423 Functional Block Diagram

Notice: The information in this document is subject to change without notice.

Typical Performance Characteristics

C1 = 22uF, C2 = 0.1uF, C3 = C4 = 22uF, TA = +25℃, unless otherwise noted.

Efficiency Test

Vin=12V

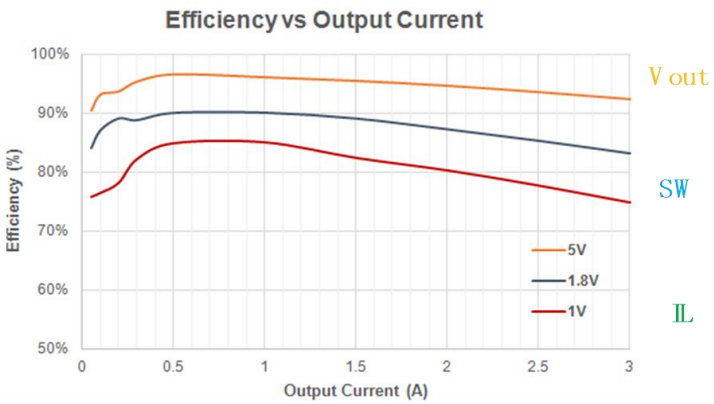

Steady State

Vin=12V,Vout=1.8V,Iout=0A

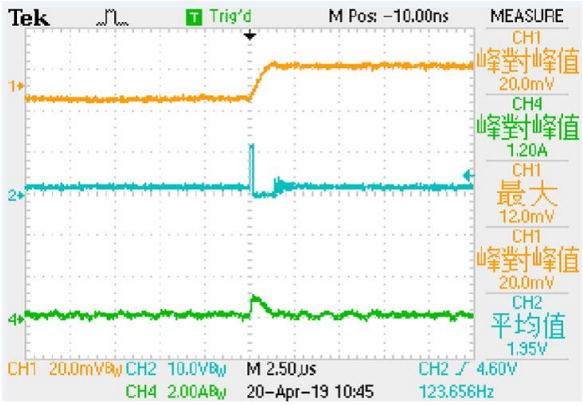

Steady State

Vin=12V,Vout=1.8V,Iout=2.0A

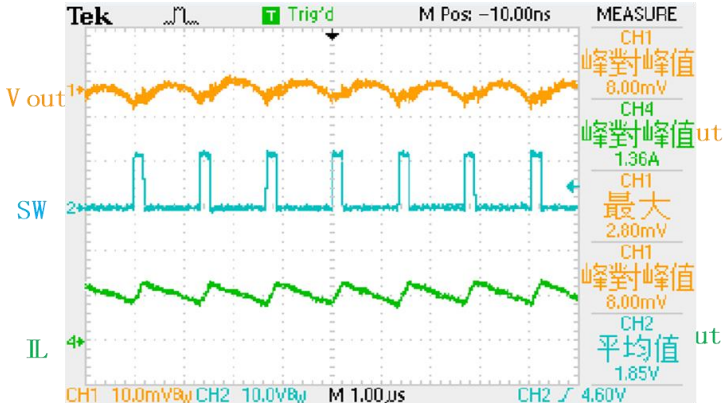

Dynamic loading

Vin=12V,Vout=1.8V,Iout=0.3 to 2.7A, 0.5A/us

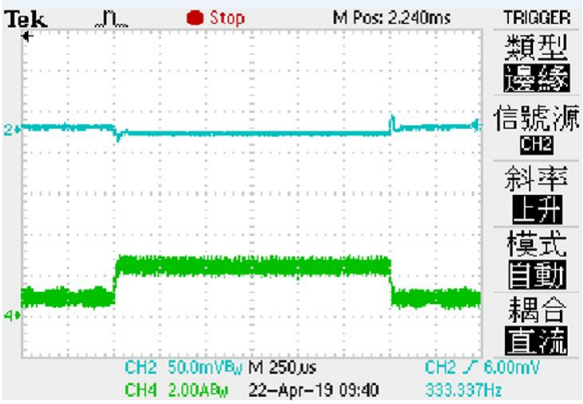

Power On

Vin=12V,Vout=1.8V,Iout=2.0A

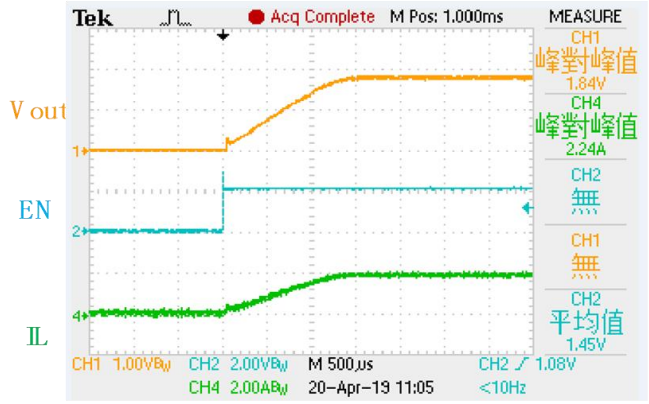

Shut Down

Vin=12V,Vout=1.8V,Iout=2A

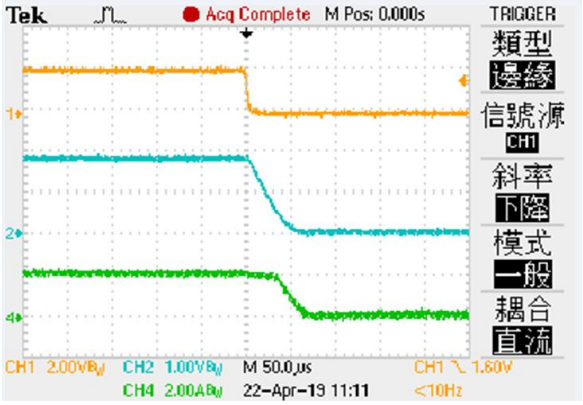

Notice: The information in this document is subject to change without notice.

Function Description:

The main control loop of LPD6423 are adaptive on-time pulse width modulation (PWM) controller. The control mechanism combines adaptive on-time control with an internal compensation circuit for pseudo-fixed frequency and low external component count configuration with both low ESR and ceramic output capacitors. It is stable even with virtually no ripple at the output.

At the beginning of each cycle, the high-side MOSFET is turned on. This MOSFET is turned off after internal one shot timer expires. This one shot duration is set proportional to the converter input voltage, VIN, and inversely proportional to the output voltage, VOUT, to maintain a pseudo-fixed frequency over the input voltage range, hence it is called adaptive on-time control. The one-shot timer is reset and the high-side MOSFET is turned on again when the feedback voltage falls below the reference voltage.

- Enable

The LPD6423 EN pin provides digital control to turn on/turn off the regulator. When the voltage of EN exceeds the threshold voltage, the regulator starts the soft start function. If the EN pin voltage is below than the shutdown threshold voltage, the regulator will be disable and into the shutdown mode.

- Output Over Voltage Protection

When the FB pin voltage exceeds 25% of the regulation voltage, the output over voltage protection function will turn the high side MOSFET off.

- Input Under Voltage Lockout

When the LPD6423 power on, the internal circuits are held inactive until VIN exceeds the input UVLO threshold voltage. And the regulator will be disabled when VIN below the input UVLO threshold voltage. The hysteretic of the UVLO comparator is 300 mV.

- Short Circuit Protection

The LPD6423 provides short circuit protection function to prevent the device damage from short condition. When the output short to ground, the oscillator frequency is reduced to prevent the inductor current increasing beyond the current limit. In the meantime, the current limit is also reduced to lower the short current. Once the short condition is removed, the frequency and current limit will return to normal.

- Over Temperature Protection

The LPD6423 incorporates an over temperature protection circuit to protect itself from overheating. When the junction temperature exceeds the thermal shutdown threshold temperature, the regulator will be shutdown.

Application Information

- Output Voltage Setting:

The external resistor divider is used to set the output voltage. LPD6423 feedback resistors are unconcerned of compensation and provide an easy way to program output voltage. Table 1 shows a list of resistor selection for common output voltages:

$$VOUT = 0.765 \times (1+R1/R2)\ V$$

- Selecting the Inductor

A 4.7μH inductor with a DC current rating of at least 30% percent higher than the maximum load current is recommended for most applications. For highest efficiency, the inductor's DC resistance should be less than 50mΩ. For most designs, the required inductance value can be derived from the following equation:

$$\Delta I = 0.3 \times I_{L(MAX)}$$

$$L \geq \frac{VOUT}{fsw \cdot \Delta I} \cdot \left(1 - \frac{VOUT}{VIN}\right)$$

Where ΔI is the inductor ripple current.

Notice: The information in this document is subject to change without notice.

Choose the inductor ripple current to be 30% of the maximum load current. The maximum inductor peak current is calculated from:

$$I_{L(MAX)} = I_{LOAD(MAX)} + \Delta I/2$$

But when a coil with poor DC superimposition (DC bias) characteristics is used, the inductor peak current may increase due to the derating of the inductor during soft start. In this case, please use a coil with better DC superimposition (DC bias) characteristics.

Under light load conditions below 100mA, a larger inductance is recommended for improved efficiency.

- Selecting the Input Capacitor

The input capacitor reduces the surge current drawn from the input supply and the switching noise from the device. The input capacitor impedance at the switching frequency should be less than the input source impedance to prevent high frequency switching current from passing through the input. Ceramic capacitors with X5R or X7R dielectrics are highly recommended because of their low ESR and small temperature coefficients. For most applications, a 22μF capacitor is sufficient.

- Selecting the Output Capacitor

The output capacitor keeps the output voltage ripple small and one or two 22uF ceramic capacitor with X5R or X7R dielectrics is recommended for its low ESR characteristics.

- External Boost Diode Selection

An external bootstrap diode is recommended if the input voltage is less than 5.5V, or duty cycle is high, or if there is a 5V system rail available. This diode helps to improve the loop operation and efficiency. Low cost switching diodes, such as B0520 are suitable for this application. Below are some application circuits for reference.

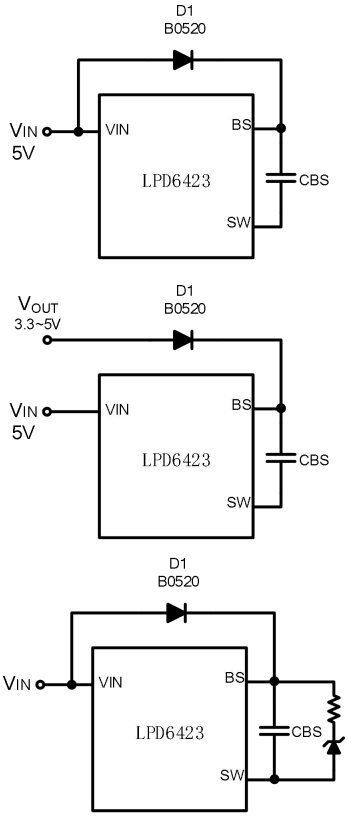

Notice: The information in this document is subject to change without notice.

PCB Layout Recommendation:

The device's performance and stability is dramatically affected by PCB layout. It is recommended to follow these general guidelines show bellow:

1. Place the input capacitors, output capacitors as close to the device as possible. Trace to these capacitors should be as short and wide as possible to minimize parasitic inductance and resistance.
2. CIN must be closes to Pins VIN and GND. The loop area formed by CIN and VIN/GND pins must be minimized.
3. The GND trace between the output capacitor and the GND pin should be as wide as possible to minimize its trace impedance.
4. Do not allow switching current to flow under the device.
5. Place feedback resistors close to the FB pin. A separate VOUT path should be connected to the upper feedback resistor.
6. Keep the sensitive signal (FB) loop away from the switching signal (SW) trace, and preferably has ground shield. The trace of the FB node should be as small as possible to avoid noise coupling.
7. Multi-layer PCB design is recommended.

Layout Example

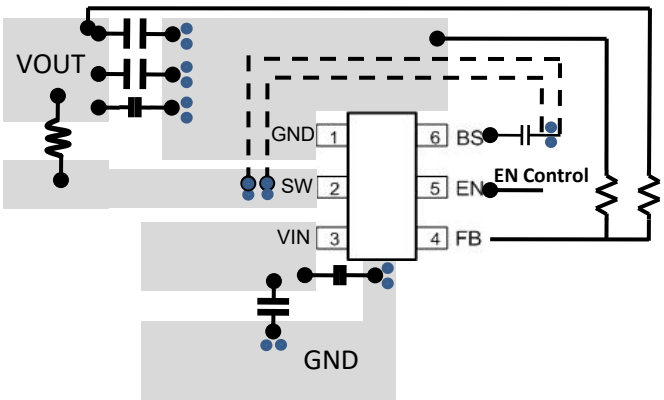

Package Information

FCSOT23-6

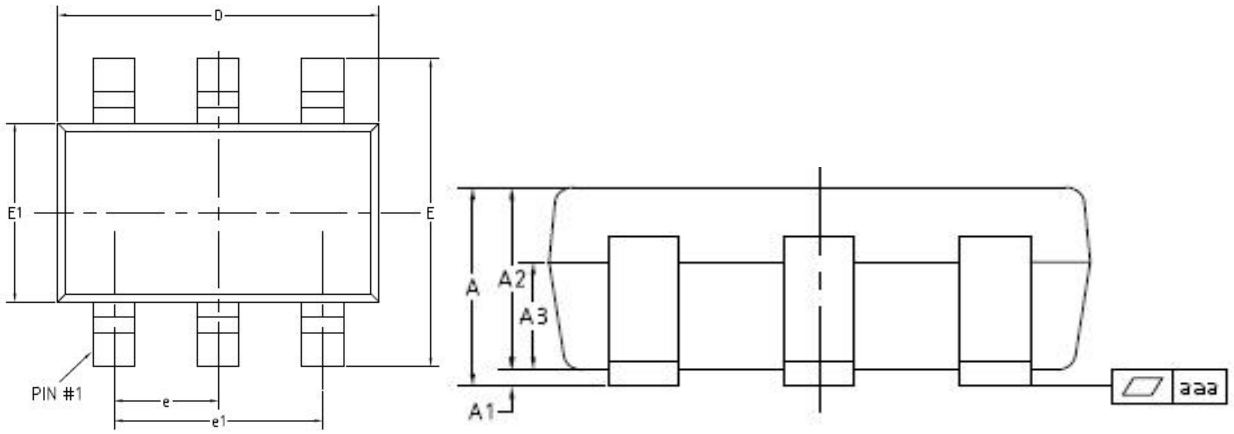

Notice: The information in this document is subject to change without notice.

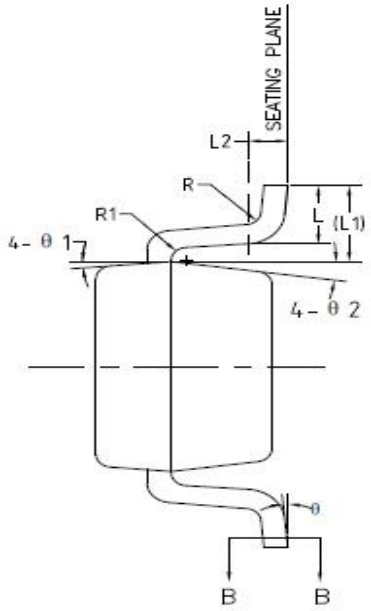

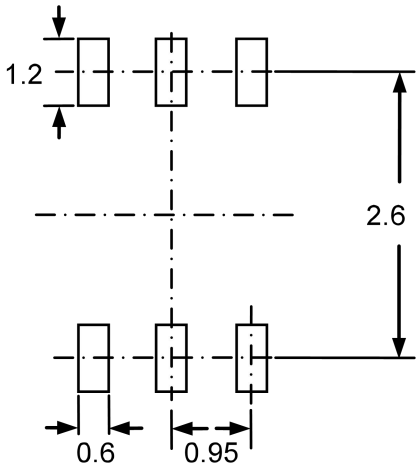

(PCB FOOTPRINT)

SYMBOLS	Min	Typ	Max
A	-----	-----	1.45
A1	0	-----	0.15
A2	0.9	1.10	1.30
b	0.39	-----	0.49
b1	0.38	0.4	0.45
c	0.12	-----	0.19
c1	0.11	0.13	0.15
D	2.85	2.95	3.05
E	2.60	2.80	3.00
E1	1.55	1.65	1.75
e	0.85	0.95	1.05
e1	1.80	1.90	2.00
L	0.35	0.45	0.55
L1	0.59 REF		
L2	0.25 BSC		
R	0.05	-----	-----
R1	0.05	-----	0.2
Θ	0°	-----	8°
Θ1	8°	10°	12°
Θ2	8°	10°	12°
aaa	0.1		

NOTES:

1. JEDEC OUTLINE: N/A
2. DIMENSIONS “D” DOES NOT INCLUDE MOLD FLASH, PROTRUSIONS OR GATE BURRS.MOLD FLASH, PROTRUSIONS AND GATE BURRS SHALL NOT EXCEED .15mm (.006in) PER SIDE.
3. DIMENSIONS “E” DOES NOT INCLUDE INTER-LEAD FLASH, OR PROTRUSIONS. INTER-LEAD FLASH AND PROTRUSIONS SHALL NOT EXCEED .25mm (.010in) PER SIDE.

Notice: The information in this document is subject to change without notice.