20V N-Channel Enhancement Mode MOSFETs

Features

- 20V, 1.8A, $R_{DS(ON)}$=280mΩ@V_{GS}=4.5V
- 20V, 1.5A, $R_{DS(ON)}$=340mΩ@V_{GS}=2.5V
- 20V, 1.2A, $R_{DS(ON)}$=580mΩ@V_{GS}=1.8V
- Low Offset (Error) Voltage
- Low-Voltage Operation
- High-Speed Circuits
- Low Battery Voltage Operation
- SOT-363 package design

Product Description

LMN1912, N-Channel enhancement mode MOSFET, uses Advanced Trench Technology to provide excellent $R_{DS(ON)}$, low gate charge.
These devices are particularly suited for low voltage power management, such as smart phone and notebook computer and other battery powered circuits, and low in-line power loss are needed in commercial industrial surface mount applications.

Applications

- Relays, Solenoids, Lamps, Hammers, Displays, Memories
- Battery Operated Systems
- Power Supply Converter Circuits
- Load/Power Switching Smart Phones, Pagers

Pin Configuration

LMN1912X6F (SOT-363)

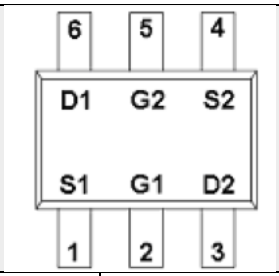

PIN	Description
1	Source1
2	Gate1
3	Drain2
4	Source2
5	Gate2
6	Drain1

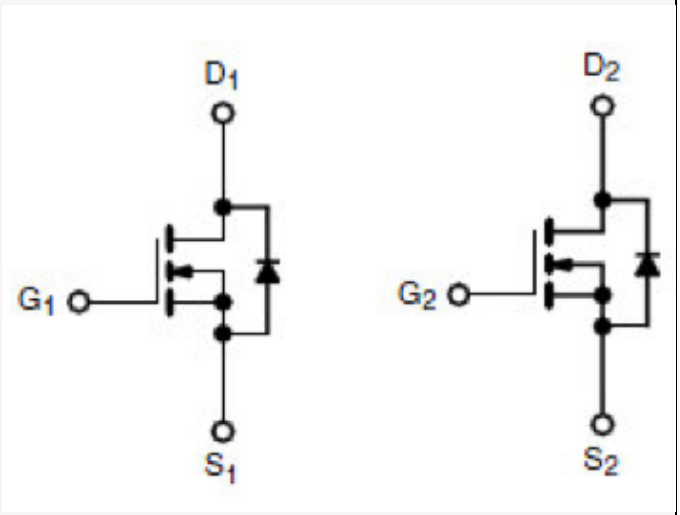

Notice: The information in this document is subject to change without notice.

Ordering Information

LMN1912	X6	F
LFC P/N	PKG code	Pb Free code

Marking Information

r	YW
Part Number	LFC code

Part Number	Package	Part Marking	Quantity
LMN1912X6F	SOT-363	rYW	3000pcs

Absolute Maximum Ratings

(T_C=25ºC Unless otherwise noted)

Symbol	Parameter		Typical	Unit
V_{DS}	Drain-Source Voltage		20	V
V_{GS}	Gate-Source Voltage		±12	V
I_D	Continuous Drain Current (T_J=150℃)	T_A=25℃	1.8	A
		T_A=70℃	1.2	
I_{DM}	Pulsed Drain Current		6	A
I_S	Continuous Source Current (Diode Conduction)		1	A
P_D	Power Dissipation	T_A=25℃	0.3	W
		T_A=70℃	0.2	
T_J	Operating Junction Temperature Range		-55 to +150	℃
T_J	Operating Junction Temperature Range		-55 to +150	℃
T_{STG}	Storage Temperature Range		-50 to +150	℃

Notice: The information in this document is subject to change without notice.
Email:amy@lfc-semi.com www.lfc-semi.com

Electrical Characteristics

(T_A=25ºC Unless otherwise noted)

Symbol	Parameter	Conditions	Min	Typ	Max	Unit
Static						
$V_{(BR)DSS}$	Drain-Source Breakdown Voltage	V_{GS}=0V, I_D=250uA	20			V
$V_{GS\ (th)}$	Gate Threshold Voltage	V_{DS}=V_{GS}, I_D=250uA	0.4		1.0	V
I_{GSS}	Gate Leakage Current	V_{DS}=0V, V_{GS}=±12V			±100	nA
I_{DSS}	Zero Gate Voltage Drain Current	V_{DS}=20V, V_{GS}=0V			1	uA
		V_{DS}=20V, V_{GS}=0V, T_A=85ºC			5	
$I_{D(ON)}$	On-State Drain Current	V_{DS}≥5V, V_{GS}=4.5V	1.8			A
$R_{DS(on)}$	Drain-Source On-Resistance	V_{GS}=4.5V, I_D=1.8A		240	280	mΩ
		V_{GS}=2.5V, I_D=1.5A		300	340	
		V_{GS}=1.8V, I_D=1.2A		500	580	
g_{FS}	Forward Transconductance	V_{DS}=10V, I_D=1A		1		S
V_{SD}	Diode Forward Voltage	I_S=1.0A, V_{GS}=0V		0.65	1.2	V
Dynamic						
Q_g	Total Gate Charge[2,3]	V_{DS}=10V, V_{GS}=4.5V, I_D=1.2A		1.06	1.38	nC
Q_{gs}	Gate-Source Charge[2,3]			0.18		
Q_{gd}	Gate-Drain Charge[2,3]			0.32		
C_{iss}	Input Capacitance	V_{DS}=10V, V_{GS}=0V, f=1MHz		70		pF
C_{oss}	Output Capacitance			20		
C_{rss}	Reverse Transfer Capacitance			8		
$t_{d(on)}$	Turn-On Time[2]	V_{DD}=10V, I_D=1.2A, R_L=20Ω V_{GS}=4.5V, R_G=1Ω		18	26	ns
t_r				20	28	
$t_{d(off)}$	Turn-Off Time[2]			70	110	
t_f				25	40	

Note:
1. Repetitive Rating: Pulsed width limited by maximum junction temperature.
2. The data tested by pulsed, pulse width ≦ 300us, duty cycle ≦ 2%.
3. Essentially independent of operating temperature.

Notice: The information in this document is subject to change without notice.
Email:amy@lfc-semi.com www.lfc-semi.com

Typical Performance Characteristics

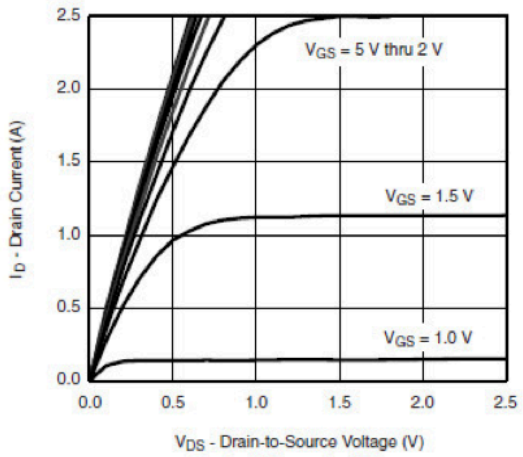

Output Characteristics

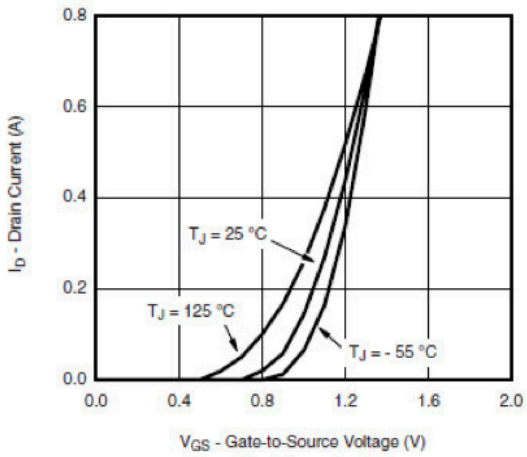

Transfer Characteristics

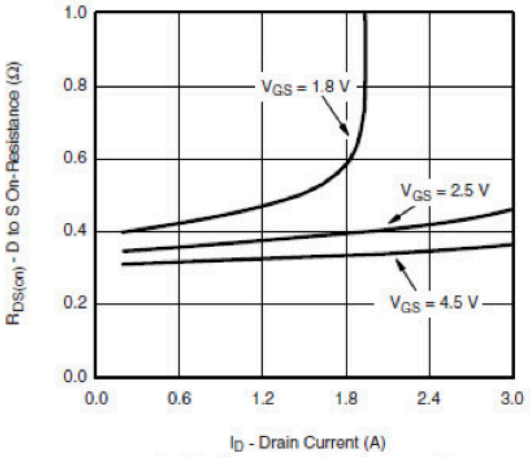

On-Resistance vs. Drain Current

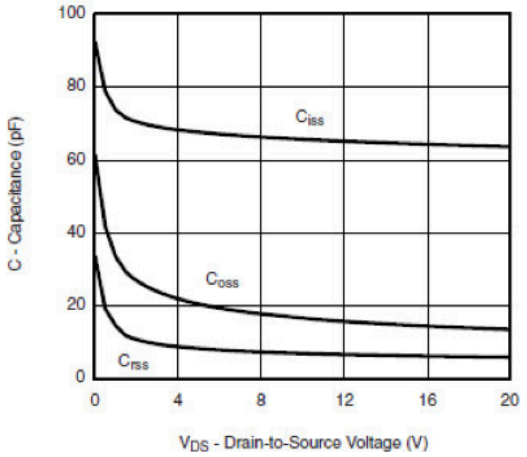

Capacitance

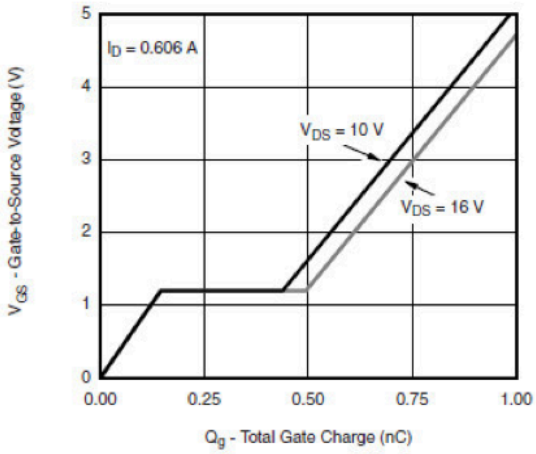

Gate Charge

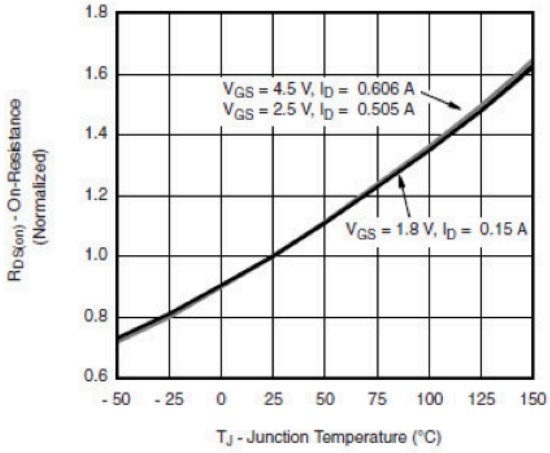

On-Resistance vs. Junction Temperature

Notice: The information in this document is subject to change without notice.

Email:amy@lfc-semi.com www.lfc-semi.com

Typical Performance Characteristics (Cont.)

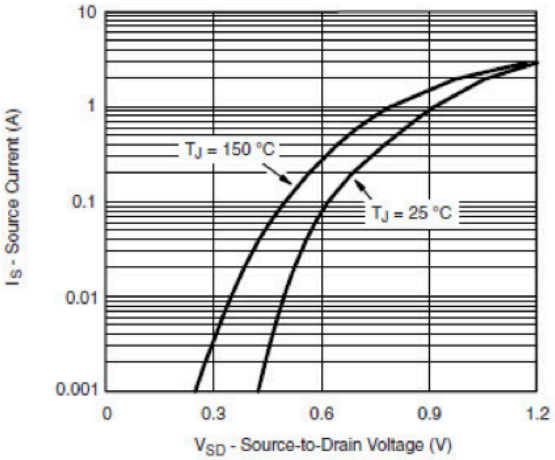

Source-Drain Diode Forward Voltage

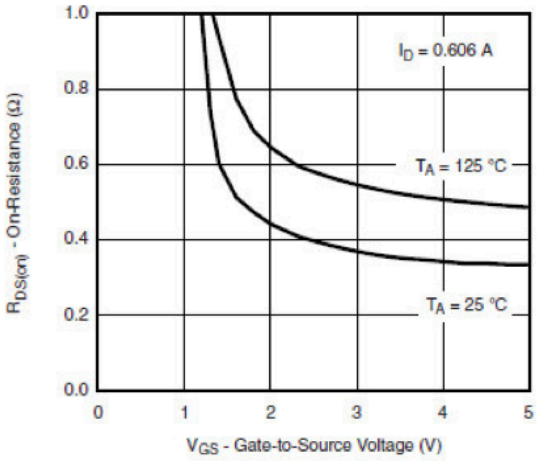

$R_{DS(on)}$ vs. V_{GS} vs Temperature

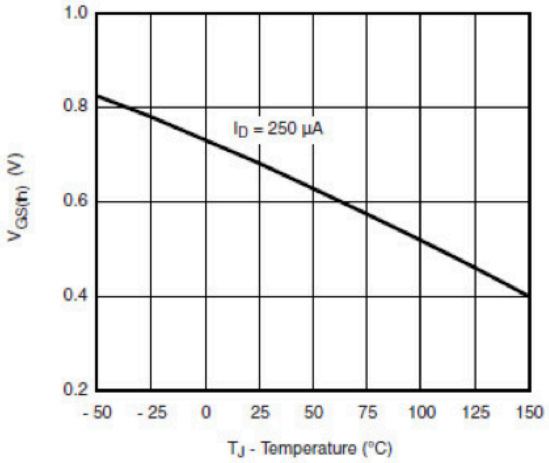

Threshold Voltage

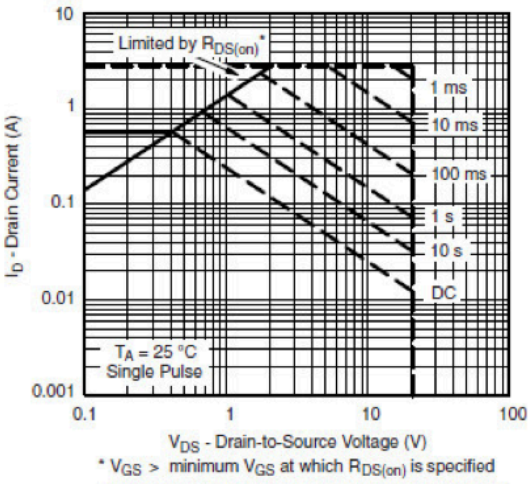

Safe Operating Area, Junction-to-Ambient

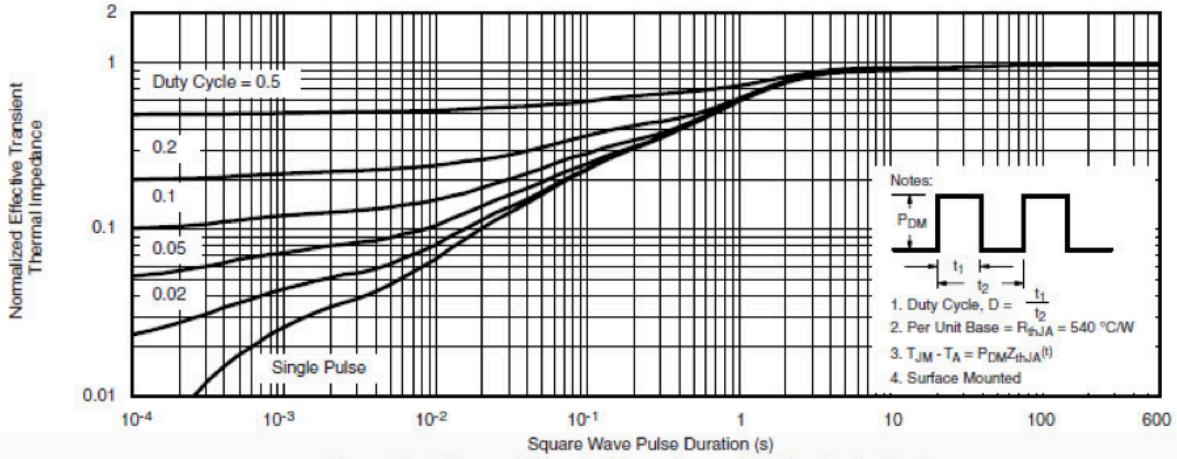

Normalized Thermal Transient Impedance, Junction-to-Ambient

Notice: The information in this document is subject to change without notice.

Email:amy@lfc-semi.com www.lfc-semi.com

Typical Performance Characteristics (Cont.)

Gate Charge Test Circuit & Waveform

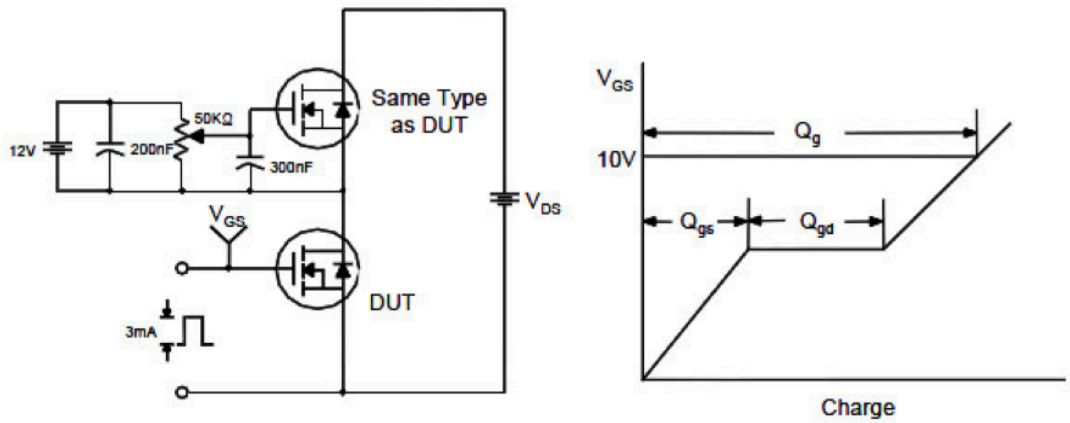

Resistive Switching Test Circuit & Waveforms

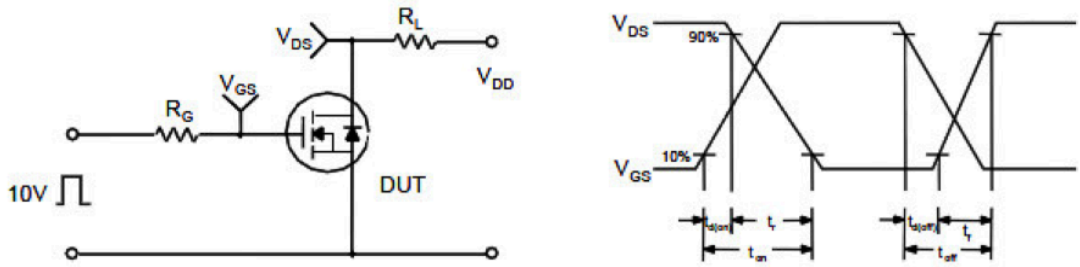

Unclamped Inductive Switching Test Circuit & Waveforms

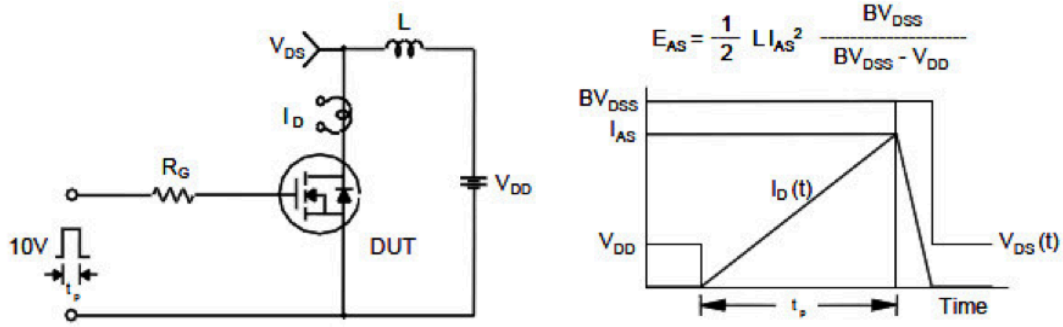

Notice: The information in this document is subject to change without notice.

Email:amy@lfc-semi.com www.lfc-semi.com

Package Dimension

SOT-363 PLASTIC PACKAGE

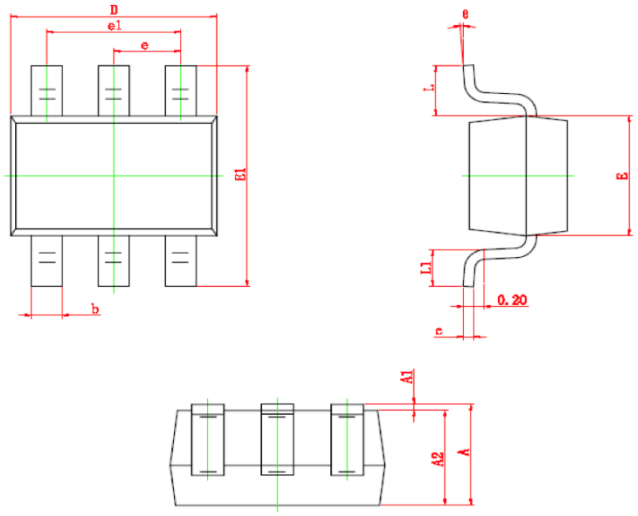

Dimensions				
Symbol	Millimeters		Inches	
	Min	Max	Min	Max
A	0.90	1.10	0.035	0.035
A1	0.00	0.10	0.000	0.000
A2	0.90	1.00	0.035	0.035
b	0.15	0.35	0.006	0.006
c	0.08	0.15	0.003	0.003
D	2.0	2.2	0.079	0.079
E	1.15	1.35	0.045	0.045
E1	2.15	2.45	0.085	0.085
e	0.650 TYP		0.026TYP	
e1	1.200	1.400	0.047	0.055
L	0.525REF		0.022REF	
L1	0.26	0.46	0.010	0.018
θ	0º	8º	0º	6º

Notice: The information in this document is subject to change without notice.
Email:amy@lfc-semi.com www.lfc-semi.com

SOT363 Dual PACKAGE INFORMATION

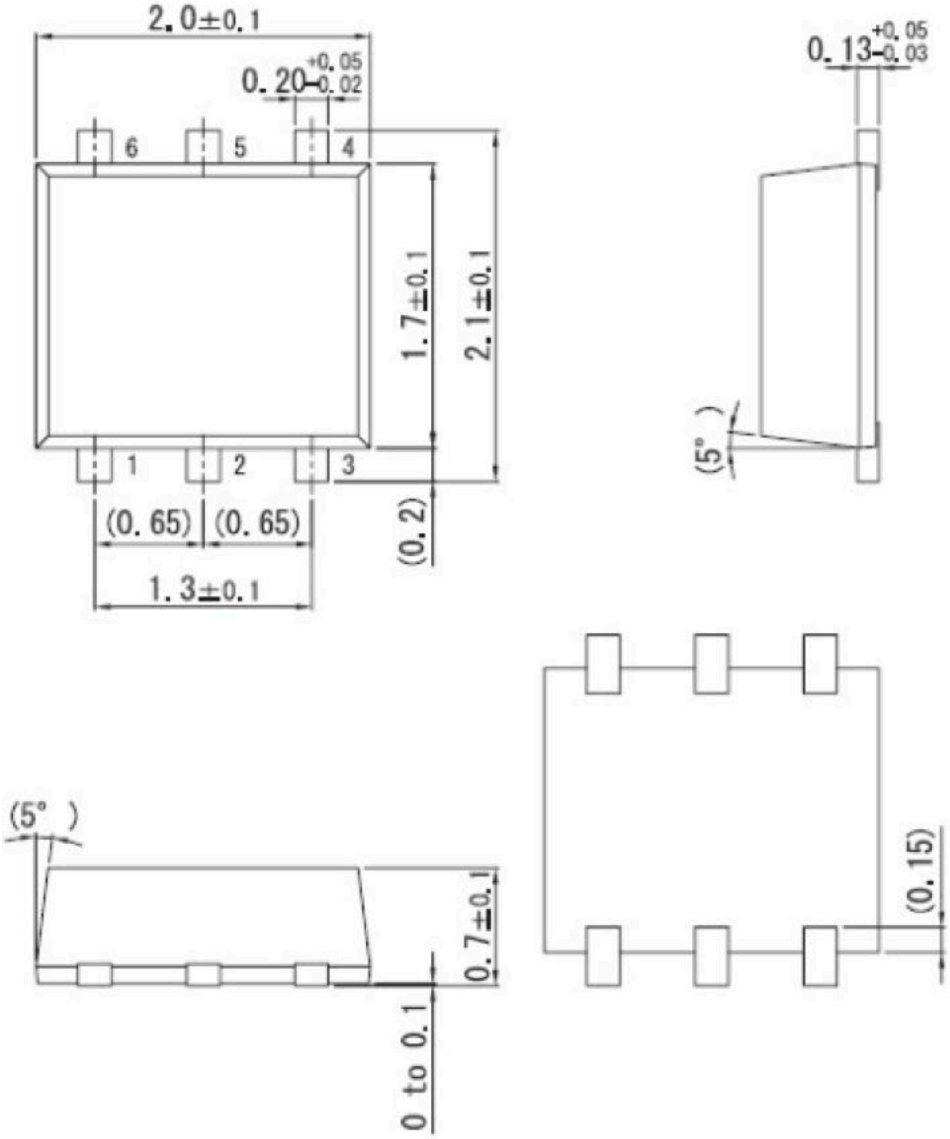

Notice: The information in this document is subject to change without notice.
Email:amy@lfc-semi.com www.lfc-semi.com