LMP02P15JZF 150V P-Channel MOSFET

Features

- -150V/-1A, $R_{DS(ON)}$<750mΩ@V_{GS}=-10V
- Fast switching
- Improved dv/dt capability
- Green Device Available
- SOT-23 package design

Product Description

These P-Channel enhancement mode power field effect transistors are using trench DMOS technology. This advanced technology has been especially tailored to minimize on-state resistance, provide superior switching performance, and withstand high energy pulse in the avalanche and commutation mode.
These devices are well suited for high efficiency fast switching applications.

Applications

- Networking
- Load Switch
- LED Application

Pin Configuration

LMP02P15JZF (SOT-23)

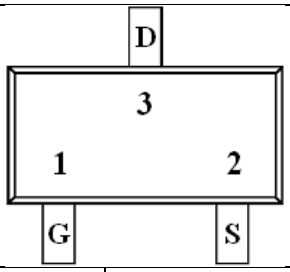

PIN	Description
1	Gate
2	Drain
3	Source

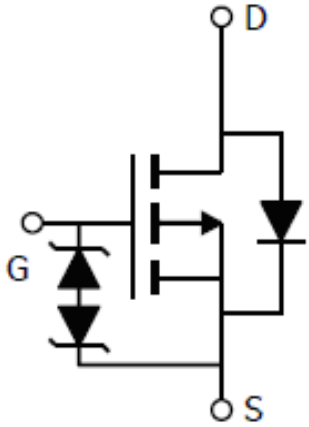

Notice: The information in this document is subject to change without notice.

Ordering Information

Ordering Information					
Part Number	P/N	PKG code	Pb Free code	Package	Quantity
LMP02P15JZF	LMP02P15	JZ	F	SOT-23	3000

Marking Information

Marking Information		
Part Marking	Part Number	LFC code
25PXW	25P	XW

Absolute Maximum Ratings

(T_C=25ºC Unless otherwise noted)

Symbol	Parameter	Typical	Unit
V_{DS}	Drain-Source Voltage	-150	V
V_{GS}	Gate–Source Voltage	±20	V
I_D	Drain Current- Continuous (T_C=25ºC)	-1	A
	Drain Current- Continuous (T_C=100ºC)	-0.63	A
I_{DM}	Drain Current- Pulsed[1]	-4	A
P_D	Power Dissipation (T_C=25ºC)	1.56	W
	Power Dissipation –Derate above 25ºC	0.012	W/ºC
T_J	Operating Junction Temperature Range	-50 to 150	ºC
T_{STG}	Storage Temperature Range	-50 to 150	ºC
$R_{\theta JA}$	Thermal Resistance-Junction to ambient	80	ºC/W

Notice: The information in this document is subject to change without notice.

Electrical Characteristics

(T_C=25ºC Unless otherwise noted)

Symbol	Parameter	Conditions	Min	Typ	Max	Unit
Static						
$V_{(BR)DSS}$	Drain-Source Breakdown Voltage	V_{GS}=0V,I_D=250uA	-150	---	---	V
$V_{GS(th)}$	Gate Threshold Voltage	V_{GS}=V_{DS},I_D=-250uA	-2	-3	-4	
I_{GSS}	Gate-Source Leakage Current	V_{DS}=0V,V_{GS}=±20V	---	---	±100	nA
I_{DSS}	Drain-Source Leakage Current	V_{DS}=-150V, V_{GS}=0V, T_J=25ºC	---	---	-1	μA
		V_{DS}=-120V,V_{GS}=0V,T_J=125ºC	---	---	-10	
$R_{DS(on)}$	Drain-Source On-Resistance	V_{GS}=-10V,I_D=-1A	---	650	800	mΩ
		V_{GS}=-6V,I_D=-0.5A	---	700	950	
V_{SD}	Diode Forward Voltage	I_S=-1A,V_{GS}=0V, T_J=25ºC	---	---	-1	V
I_S	Continuous Source Current	V_{GS}=V_D=0V,Force Current	---	---	-1	A
I_{SM}	Pulsed Source Current		---	---	-2	A
g_{FS}	Forward Transconductance	V_{DS}=-10V,I_D=1A	---	2	---	S
R_g	Gate resistance	V_{DS}=0V, V_{GS}=0V, F=1MHz	---	30	60	Ω
Dynamic						
C_{iss}	Input Capacitance	V_{DS}=-25V, V_{GS}=0V, F=1MHz	---	430	700	pF
C_{oss}	Output Capacitance		---	38	60	
C_{rss}	Reverse Transfer Capacitance		---	28	56	
Q_g	Total Gate Charge[2,3]	V_{DS}=-75V, V_{GS}=10V, I_D=-1A	---	4.4	8	nC
Q_{gs}	Gate-Source Charge[2,3]		---	0.7	2	
Q_{gd}	Gate-Drain Charge[2,3]		---	1.5	3	
$t_{d(on)}$	Turn-On Time[2,3]	V_{DD}=-75V, V_{GS}=-10V, R_G=10Ω, I_D=-1A	---	12.5	20	ns
t_r			---	8.9	18	
$t_{d(off)}$	Turn-Off Time[2,3]		---	17.3	36	
t_f			---	11.5	24	

Note :

1. Repetitive Rating : Pulsed width limited by maximum junction temperature.
2. The data tested by pulsed , pulse width ≦ 300us , duty cycle ≦ 2%.
3. Essentially independent of operating temperature.

GSM02P15

Notice: The information in this document is subject to change without notice.

Typical Performance Characteristics

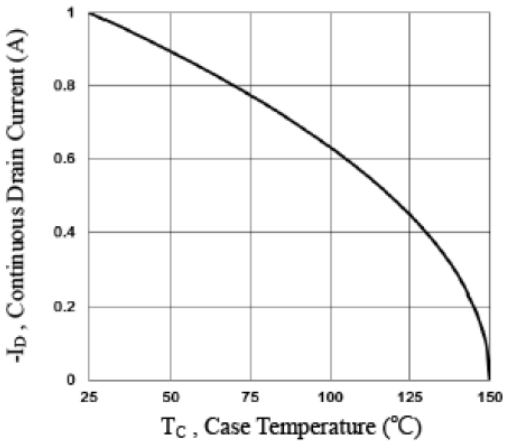

Fig.1 Continuous Drain Current vs. Tc

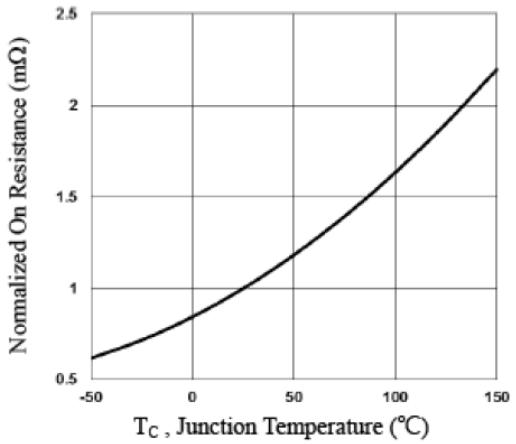

Fig.2 Continuous Drain Current vs. Tc

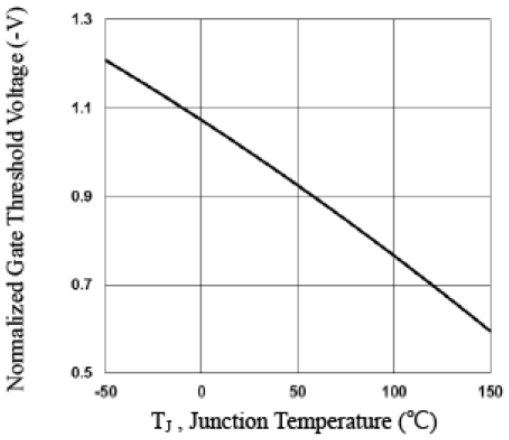

Fig.3 Normalized V_{th} vs. T_J

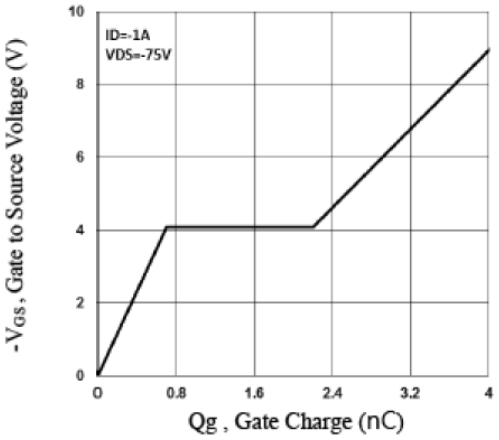

Fig.4 Gate Charge Waveform

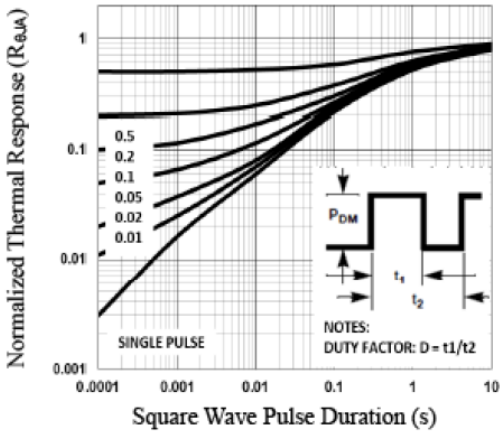

Fig.5 Normalized Transient Impedance

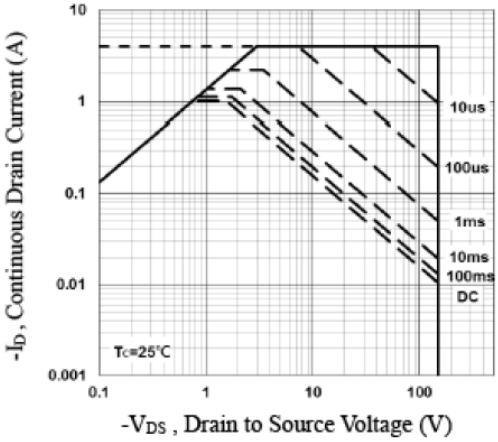

Fig.6 Maximum Safe Operation Area

Notice: The information in this document is subject to change without notice.

Typical Performance Characteristics(continue)

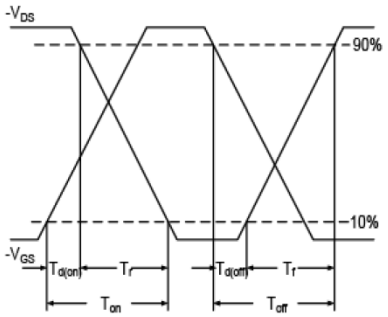

Fig.7 Switching Time Waveform

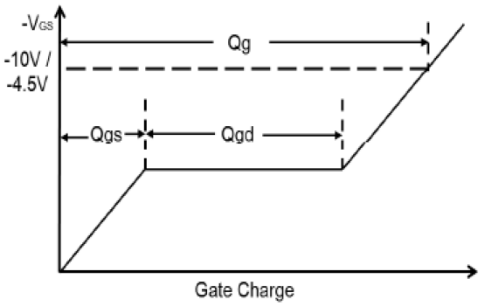

Fig.8 Gate Charge Waveform

Package Dimension:

SOT-23

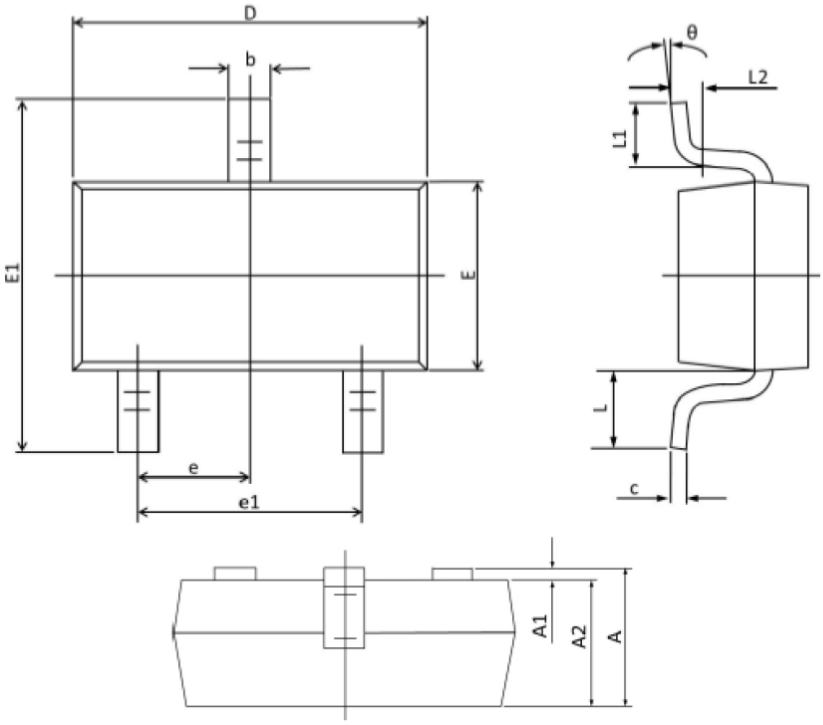

Notice: The information in this document is subject to change without notice.

Dimensions				
SYMBOL	Millimeters		Inches	
	MIN	MAX	MIN	MAX
A	0.900	1.150	0.035	0.045
A1	0.000	0.100	0.000	0.004
A2	0.900	1.050	0.035	0.041
b	0.300	0.500	0.012	0.020
c	0.080	0.150	0.003	0.008
D	2.800	3.000	0.110	0.006
E	1.200	1.400	0.047	0.118
E1	2.250	2.550	0.089	0.055
e	0.950 (TYP)		0.037 (TYP)	
e1	1.800	2.000	0.071	0.079
L	0.55(REF)		0.028 (REF)	
L1	0.300	0.500	0.012	0.020
θ	0°	8°	0°	8°

NOTICE:

LFC Semiconductor assumes no responsibility for equipment failures that result from using products at values that exceed, even momentarily, rated values (such as maximum ratings, operating condition ranges, or other parameters) listed in products specifications of any and all LFC Semiconductor products described or contained herein. LFC Semiconductor products are not designed for use in life support appliances, devices or systems where malfunction of these products can be reasonably expected to result in personal injury. Reproduction in whole or in part is prohibited without the prior written consent of the copyright owner.

Applications shown on the herein document are examples of standard use and operation. Customers are responsible in comprehending the suitable use in particular applications. LFC Semiconductor makes no representation or warranty that such applications will be suitable for the specified use without further testing or modification.

Information furnished is believed to be accurate and reliable. However LFC Semiconductor assumes no responsibility for the consequences of use of such information nor for any infringement of patents or other rights of third parties, which may result from its use. No license is granted by implication or otherwise under any patent or patent rights of LFC Semiconductor. Specifications mentioned in this publication are subject to change without notice. This publication supersedes and replaces all information without express written approval of LFC Semiconductor.

Notice: The information in this document is subject to change without notice.