LMP3153SF 30V P-Channel Enhancement Mode MOSFET

Features

- $R_{DS(ON)}$=54mΩ@V_{GS}=-10V
- $R_{DS(ON)}$=72mΩ@V_{GS}=-4.5V
- $R_{DS(ON)}$=120mΩ@V_{GS}=-2.5V
- Suit for -2.5V Gate Drive Applications

Product Description

LMP3153SF, P-Channel enhancement mode MOSFET, uses Advanced Trench Technology to provide excellent $R_{DS(ON)}$, low gate charge.
These devices are particularly suited for low voltage power management, and low in-line power loss are needed in commercial industrial surface mount applications.

Applications

- Notebook
- LED Display
- DC-DC System
- LCD Panel

Pin Configuration

LMP3153SF (SOP-8)

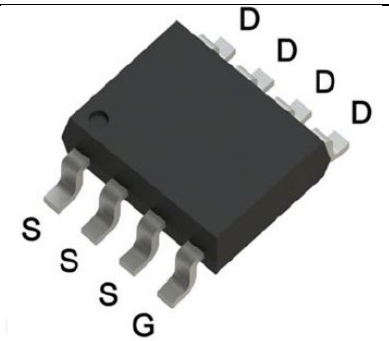

PIN	Description
1	Source
2	Source
3	Source
4	Gate
5	Drain
6	Drain
7	Drain
8	Drain

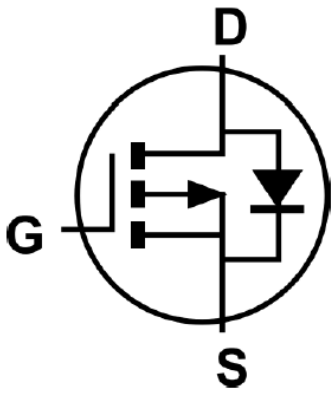

Notice: The information in this document is subject to change without notice.

Ordering Information

Ordering Information					
Part Number	P/N	PKG code	Pb Free code	Package	Quantity
LMP3153SF	LMP3153	S	F	SOP-8	4000pcs

Marking Information

Marking Information	
Product Code:	LFC code
3153S	□□□□□□

Absolute Maximum Ratings

(T_C=25ºC Unless otherwise noted)

Symbol	Parameter		Typical	Unit
V_{DSS}	Drain-Source Voltage		-30	V
V_{GSS}	Gate-Source Voltage		±12	V
I_D	Continuous Drain Current (T_J=150℃)	T_A=25℃	-4.4	A
		T_A=70℃	-3.5	
I_{DM}	Pulsed Drain Current		-18	A
I_S			-1	
P_D	Power Dissipation	T_A=25℃	1.5	W
		T_A=70℃	1	
T_J	Operating Junction Temperature		-55 to +150	℃
T_{STG}	Storage Temperature Range		-55 to +150	℃
$R_{\theta JA}$	Thermal Resistance-Junction to Case		80	℃/W

Notice: The information in this document is subject to change without notice.

Electrical Characteristics

(T_C=25ºC Unless otherwise noted)

Symbol	Parameter	Conditions	Min	Typ	Max	Unit
Static characteristics						
BV_{DSS}	Drain-Source Breakdown Voltage	V_{GS}=0V, I_D=-250uA	-30			V
$V_{GS\ (th)}$	Gate Threshold Voltage	V_{DS}=V_{GS}, I_D=-250uA	-0.4		-1.3	V
I_{GSS}	Gate Leakage Current	V_{DS}=0V, V_{GS}=±12V			±100	uA
I_{DSS}	Zero Gate Voltage Drain Current	V_{DS}=-24V, V_{GS}=0V			-1	uA
		V_{DS}=-24V, V_{GS}=0V T_J=85ºC			-30	
V_{SD}	Diode Forward Voltage	I_S=-1A, V_{GS}=0V		-0.7	-1.0	V
$R_{DS(on)}$	Drain-Source On-Resistance	V_{GS}=-10V, I_D=-4.8A		44	54	mΩ
		V_{GS}=-4.5V, I_D=-3.8A		62	72	
		V_{GS}=-2.5V, I_D=-3.0A		98	120	
Dynamic characteristics						
Q_g	Total Gate Charge	V_{DD}=-10V, V_{GS}=-10V, I_D=-4.8A		13.6		nC
Q_{gs}	Gate-Source Charge			1.2		
Q_{gd}	Gate-Drain Charge			2.0		
C_{iss}	Input Capacitance	V_{DS}=-15V, V_{GS}=0V, f=1.0MHz		573		pF
C_{oss}	Output Capacitance			74		
C_{rss}	Reverse Transfer Capacitance			53		
$t_{d(on)}$	Turn-On Time	V_{DD}=-15V, V_{GEN}=-10V, R_L=10Ω, I_D=-1.0A, R_G=6.0Ω		6.9		ns
t_r				12.3		
$t_{d(off)}$	Turn-Off Time			25		
t_f				13		

Notice: The information in this document is subject to change without notice.

Typical Performance Characteristics

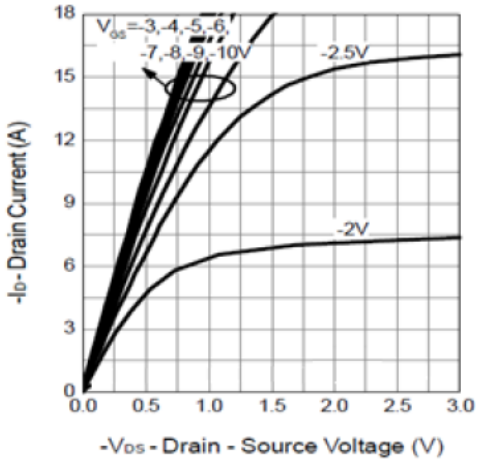

Figure 1. Output Characteristics

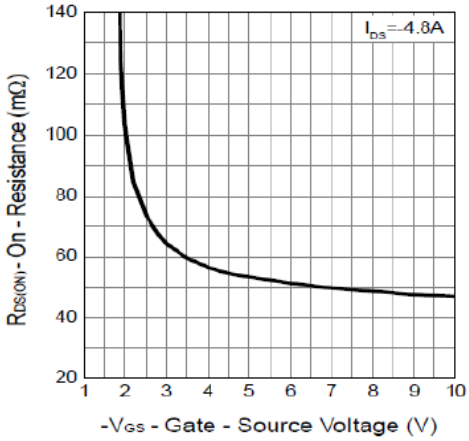

Figure 2. On-Resistance vs. Gate-Source Voltage

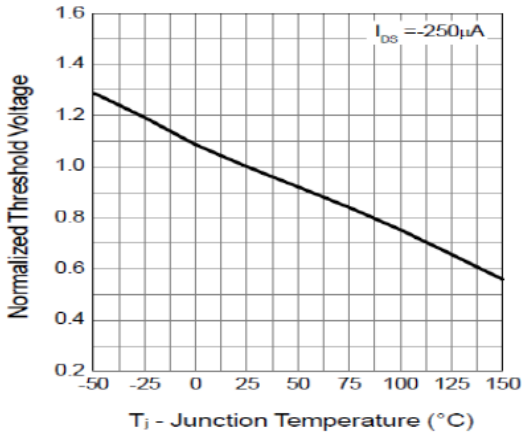

Figure 3. Threshold Voltage

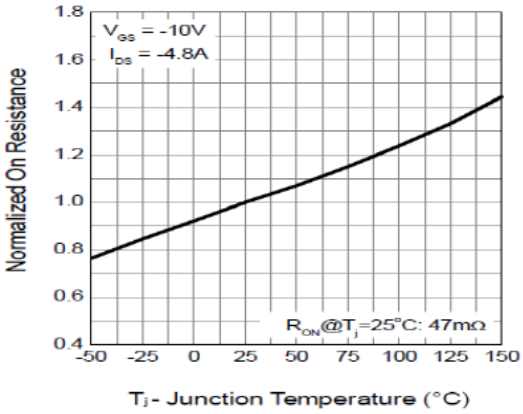

Figure 4. Drain-Source On-State Resistance vs T

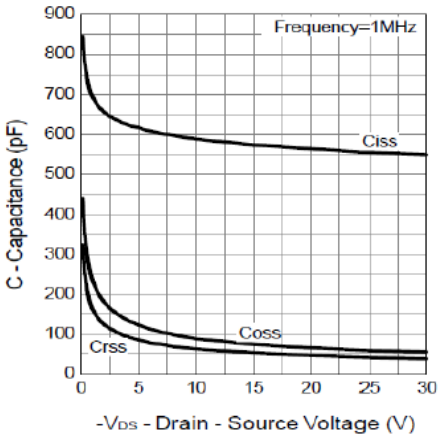

Figure 5. Capacitance

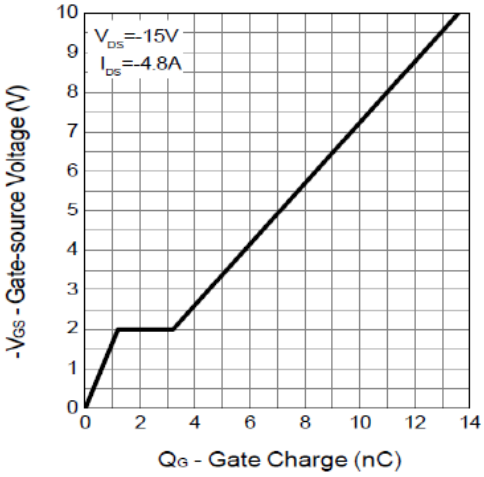

Figure 6. Gate Charge

Notice: The information in this document is subject to change without notice.

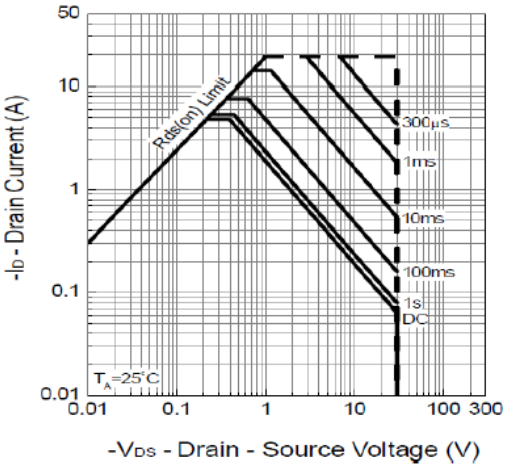

Figure 7. Safe Operation Area

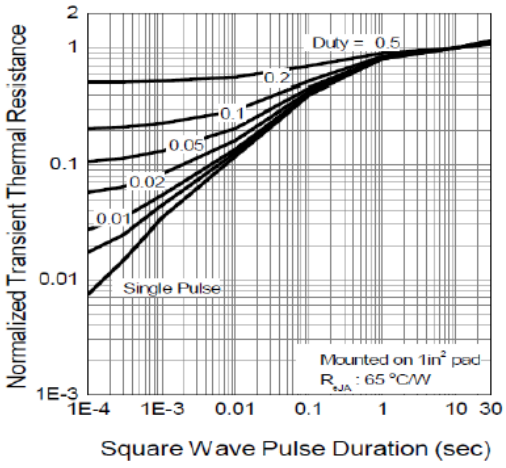

Figure 8. Normalized Thermal Transient Impedance

Notice: The information in this document is subject to change without notice.

Package Dimension:

SOP-8

Package Dimension

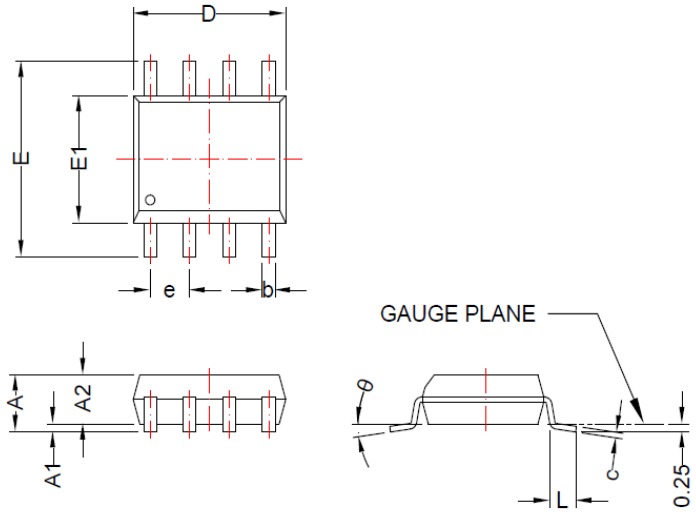

Recommended Land Pattern

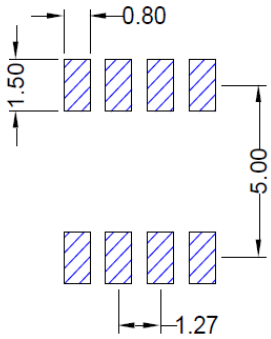

Dimensions				
Symbol	**Millimeters**		**Inches**	
	Min	Max	Min	Max
A	-	1.75	-	0.069
A1	0.10	0.25	0.004	0.010
A2	1.25	-	0.049	-
b	0.31	0.51	0.012	0.020
c	0.10	0.25	0.004	0.010
D	4.70	5.10	0.185	0.201
E	5.80	6.20	0.228	0.244
E1	3.80	4.00	0.150	0.157
e	1.27 (BSC)		0.050 (BSC)	
L	0.4	1.27	0.016	0.050
θ	0°	8°	0°	8°

NOTE:
Dimensions are exclusive of Burrs, Mold Flash & Tie Bar extrusions.

Notice: The information in this document is subject to change without notice.

NOTICE:

LFC Semiconductor assumes no responsibility for equipment failures that result from using products at values that exceed, even momentarily, rated values (such as maximum ratings, operating condition ranges, or other parameters) listed in products specifications of any and all LFC Semiconductor products described or contained herein. LFC Semiconductor products are not designed for use in life support appliances, devices or systems where malfunction of these products can be reasonably expected to result in personal injury. Reproduction in whole or in part is prohibited without the prior written consent of the copyright owner.

Applications shown on the herein document are examples of standard use and operation. Customers are responsible in comprehending the suitable use in particular applications. LFC Semiconductor makes no representation or warranty that such applications will be suitable for the specified use without further testing or modification.

Information furnished is believed to be accurate and reliable. However LFC Semiconductor assumes no responsibility for the consequences of use of such information nor for any infringement of patents or other rights of third parties, which may result from its use. No license is granted by implication or otherwise under any patent or patent rights of LFC Semiconductor. Specifications mentioned in this publication are subject to change without notice. This publication supersedes and replaces all information without express written approval of LFC Semiconductor.

Notice: The information in this document is subject to change without notice.