LMP3385XF 30V P-Channel MOSFET

Features

- -30V/-54A, $R_{DS(ON)}$<8mΩ@V_{GS}=-10V
- Fast switching
- Suit for -4.5V Gate Drive Applications
- Green Device Available
- DFN5X6-8L package design

Product Description

These P-Channel enhancement mode power field effect transistors are using trench DMOS technology. This advanced technology has been especially tailored to minimize on-state resistance, provide superior switching performance, and withstand high energy pulse in the avalanche and commutation mode.

These devices are well suited for high efficiency fast switching applications.

Applications

- Motor Driver Applications
- POL Applications
- Load Switch
- LED Application

Pin Configuration

LMP3385XF (DNF5X6-8L)

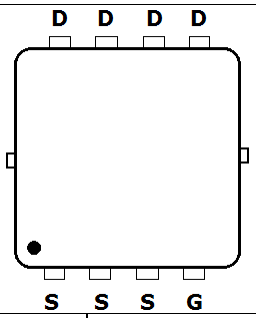

PIN	Description
1	Source
2	Source
3	Source
4	Gate
5	Drain
6	Drain
7	Drain
8	Drain

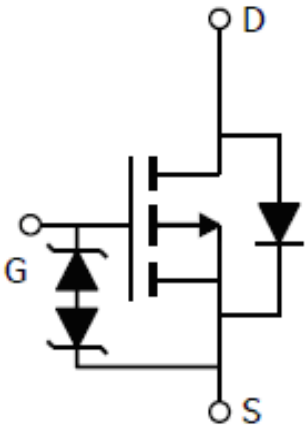

Notice: The information in this document is subject to change without notice.

Ordering Information

Ordering Information					
Part Number	P/N	PKG code	Pb Free code	Package	Quantity
LMP3385XF	LMP3385	X	F	DFN5X6-8L	3000

Marking Information

Marking Information		
Part Marking	Part Number	LFC code
3385XF XWMMMM	3385XF	XWMMMM

Absolute Maximum Ratings

(T_C=25ºC Unless otherwise noted)

Symbol	Parameter		Typical	Unit
V_{DS}	Drain-Source Voltage		-30	V
V_{GS}	Gate-Source Voltage		±25	V
I_D	Continuous Drain Current	T_C=25℃	-54	A
		T_C=100℃	-34	
I_{DM}	Pulsed Drain Current[1]		-180	A
P_D	Power Dissipation	T_C=25℃	37.9	W
		T_C=100℃	15.2	
T_J	Operating Junction Temperature Range		-55 to +150	℃
T_{STG}	Storage Temperature Range		-55 to +150	℃
$R_{\theta JC}$	Thermal Resistance-Junction to Case		3.3	℃/W

Notice: The information in this document is subject to change without notice.

Electrical Characteristics

(T_C=25ºC Unless otherwise noted)

Symbol	Parameter	Conditions	Min	Typ	Max	Unit
Static characteristics						
$V_{(BR)DSS}$	Drain-Source Breakdown Voltage	V_{GS}=0V, I_D=-250uA	-30			V
$V_{GS(th)}$	Gate Threshold Voltage	V_{DS}=V_{GS}, I_D=-250uA	-1.2	-1.6	-2.5	V
I_{GSS}	Gate Leakage Current	V_{DS}=0V, V_{GS}=±25V			±100	nA
I_{DSS}	Drain-Source Leakage Current	V_{DS}=-30V, V_{GS}=0V			-1	uA
V_{SD}	Diode Forward Voltage[3]	V_{GS}=0V, I_S=-1A			-1	V
$R_{DS(on)}$	Drain-Source On-Resistance[3]	V_{GS}=-10V, I_D=-10A		6.9	7.8	mΩ
		V_{GS}=-4.5V, I_D=-6A		10.7	12.3	
Gate charge characteristics						
Q_g	Total Gate Charge[3,4]	V_{DD}=-15V, V_{GS}=10V, I_D=-15A		68		nC
Q_{gs}	Gate-Source Charge[3,4]			10		
Q_{gd}	Gate-Drain Charge[3,4]			12		
Dynamic characteristics						
C_{iss}	Input Capacitance	V_{DS}=-15V,V_{GS}=0V, f=1.0MHz		4319		pF
C_{oss}	Output Capacitance			439		
C_{rss}	Reverse Transfer Capacitance			299		
$t_{d(on)}$	Turn-On Time	V_{DD}=-15V, V_{GS}=-10V, Rg=3.3Ω, I_D=-15A		12		ns
t_r	Rise Time			11		
$t_{d(off)}$	Turn-Off Time			105		
t_f	Fall Time			21		

Notice: The information in this document is subject to change without notice.

Typical Performance Characteristics

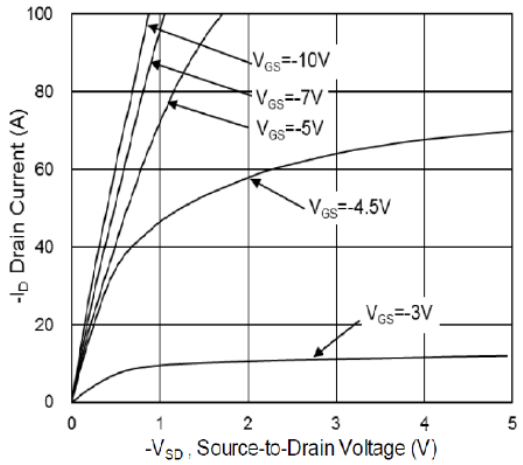

Figure 1. Output Characteristics

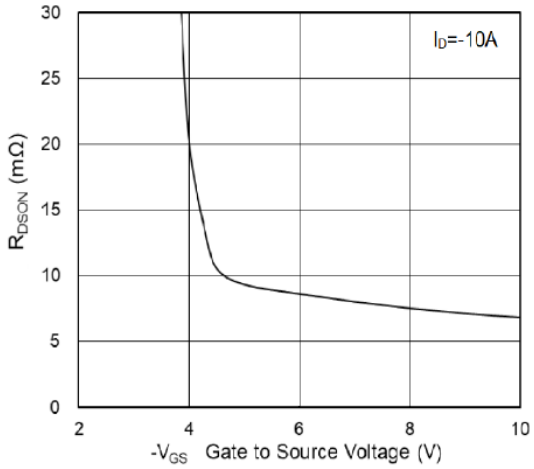

Figure 2. On-Resistance Variation with V_{GS}

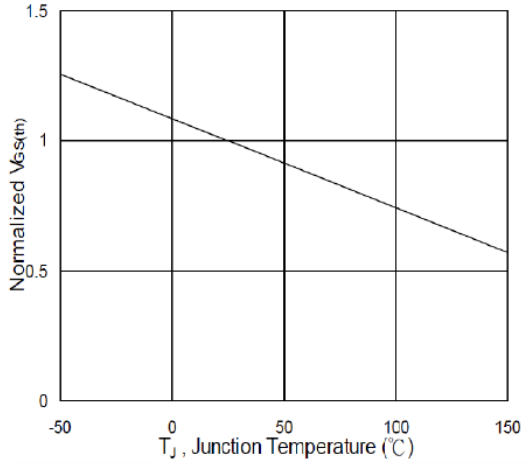

Figure 3. Normalized $V_{GS(th)}$ vs. T_J

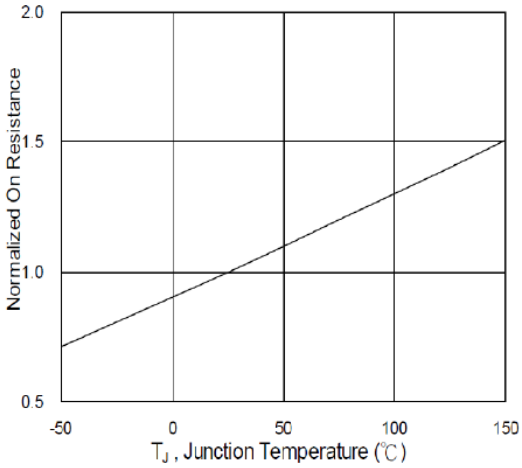

Figure 4. Normalized R_{DSON} vs. T_J

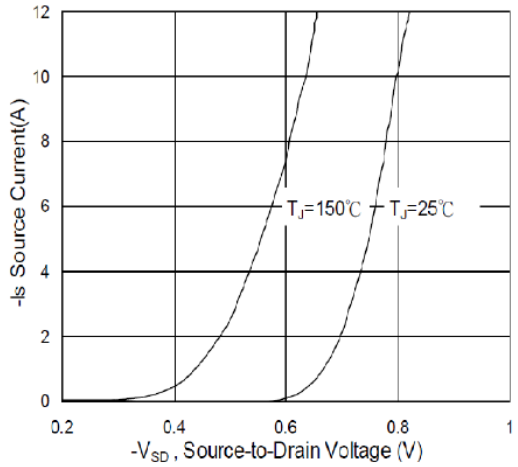

Figure 5. Diode Forward Voltage vs. Current

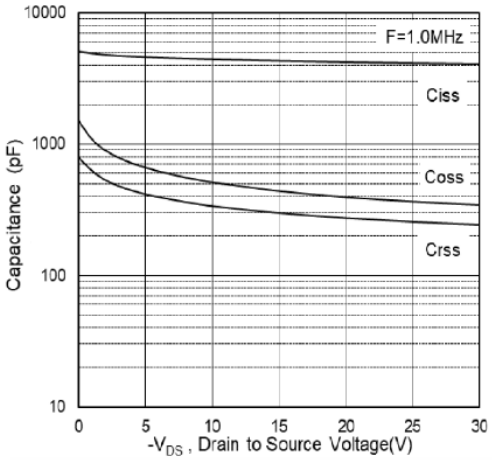

Figure 6. Capacitance

Notice: The information in this document is subject to change without notice.

Typical Performance Characteristics(continue)

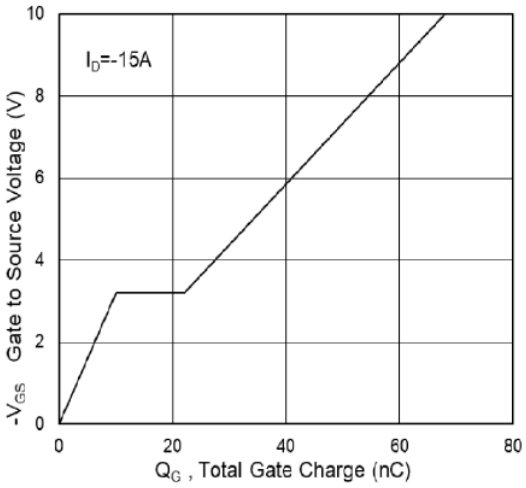

Figure 7. Gate Charge Waveform

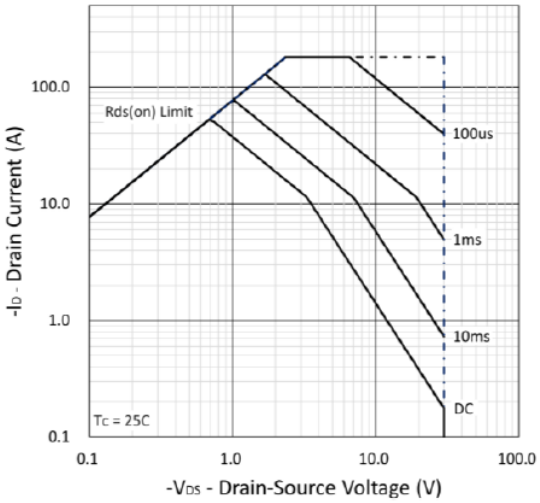

Figure 8. Maximum Safe Operating Area

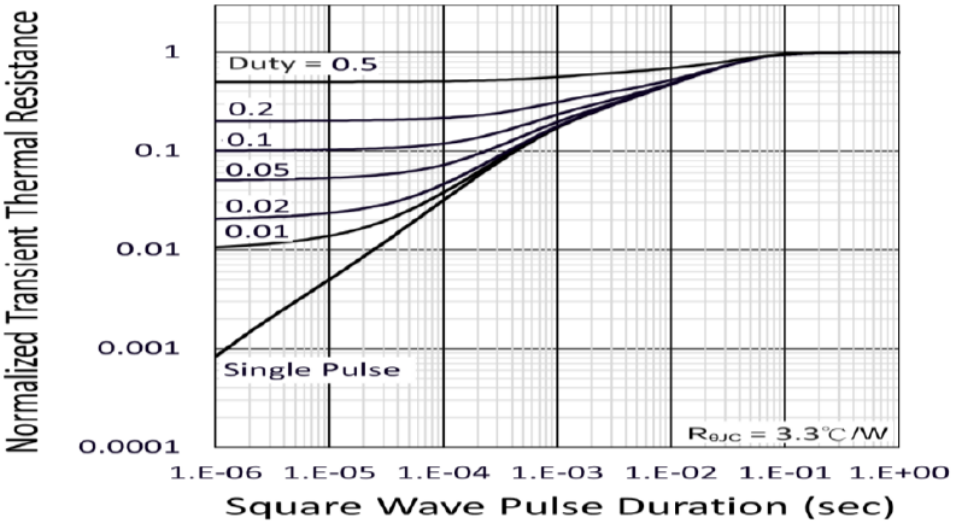

Figure 9. Normalized Transient Thermal Resistance

Notice: The information in this document is subject to change without notice.

Package Dimension:

DFN5X6-8L

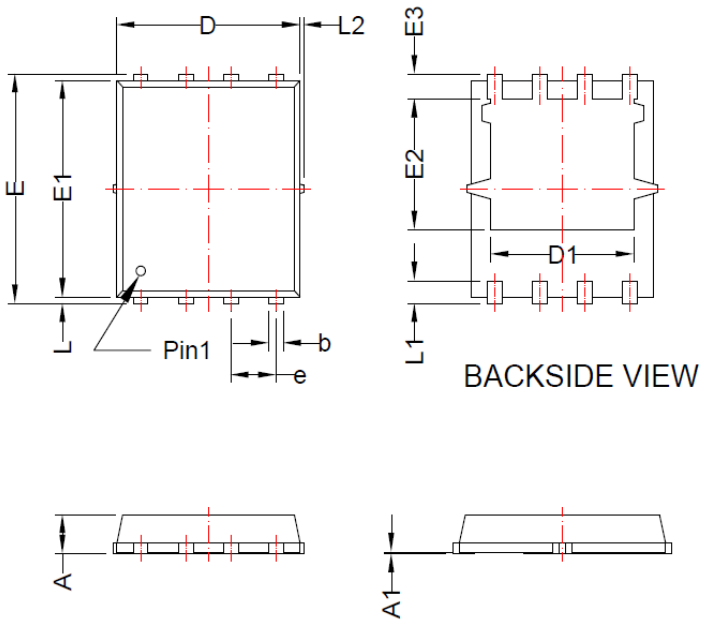

DIMENSION D AND E1 DOES NOT INCLUDE MOLD FLASH,PROTRUSIONS OR GATE BURRS.MOLD FLASH,PROTRUSIONS OR GATE BURRS SHALL HOT EXCEED 0.5mm PER INTERLEAD FLASH OR PROTRUSIOB SHALL NOT EXCEED 0.5mm PER SIDE.

Dimensions				
SYMBOL	Millimeters		Inches	
	MIN	MAX	MIN	MAX
A	0.80	1.20	0.031	0.047
A1	0.00	0.05	0.000	0.002
b	0.25	0.51	0.010	0.020
c	0.20	0.35	0.008	0.014
D	4.90	5.40	0.193	0.213
D1	3.40	4.60	0.134	0.181
E	5.90	6.20	0.232	0.244
E1	5.40	5.90	0.213	0.232
E2	3.20	3.80	0.126	0.150
E3	0.40	0.80	0.016	0.031
H1	1.27 BSC		0.050 BSC	
L	0.1	0.25	0.004	0.010
L1	0.45	0.75	0.018	0.030
L2	---	0.15	---	0.006

Notice: The information in this document is subject to change without notice.

NOTICE:

LFC Semiconductor assumes no responsibility for equipment failures that result from using products at values that exceed, even momentarily, rated values (such as maximum ratings, operating condition ranges, or other parameters) listed in products specifications of any and all LFC Semiconductor products described or contained herein. LFC Semiconductor products are not designed for use in life support appliances, devices or systems where malfunction of these products can be reasonably expected to result in personal injury. Reproduction in whole or in part is prohibited without the prior written consent of the copyright owner.

Applications shown on the herein document are examples of standard use and operation. Customers are responsible in comprehending the suitable use in particular applications. LFC Semiconductor makes no representation or warranty that such applications will be suitable for the specified use without further testing or modification.

Information furnished is believed to be accurate and reliable. However LFC Semiconductor assumes no responsibility for the consequences of use of such information nor for any infringement of patents or other rights of third parties, which may result from its use. No license is granted by implication or otherwise under any patent or patent rights of LFC Semiconductor. Specifications mentioned in this publication are subject to change without notice. This publication supersedes and replaces all information without express written approval of LFC Semiconductor.

Notice: The information in this document is subject to change without notice.