# LMP3335SF 30V P-Channel Enhancement Mode MOSFET

## Features

- $R_{DS(ON)}$=5mΩ@$V_{GS}$=-10V
- $R_{DS(ON)}$=7.8mΩ@$V_{GS}$=-4.5V
- Fast switching
- Suit for -4.5V Gate Drive Applications
- Green Device Available

## Product Description

The P-Channel enhancement mode power field effect transistor is using trench DMOS technology. This advanced technology has been especially tailored to minimize on-state resistance, provide superior switching performance, and withstand high energy pulse in the avalanche and commutation mode.

This device is well suited for high efficiency fast switching applications.

## Applications

- Motor Driver Applications
- POL Applications
- Load Switch
- LED Application

## Pin Configuration

LMP3335SF (SOP-8)

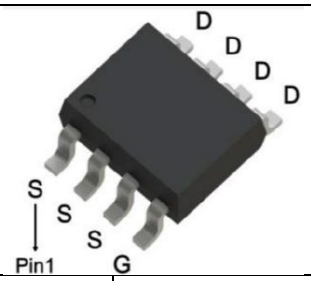


| PIN | Description |
|---|---|
| 1 | Source |
| 2 | Source |
| 3 | Source |
| 4 | Gate |
| 5 | Drain |
| 6 | Drain |
| 7 | Drain |
| 8 | Drain |

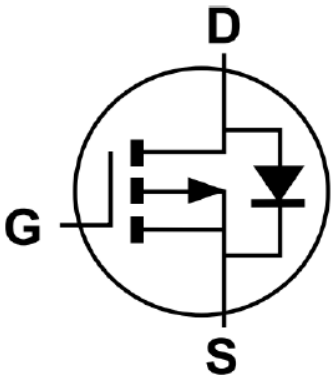




Notice: The information in this document is subject to change without notice.

## Ordering Information

| Ordering Information | | | | | |
|---|---|---|---|---|---|
| Part Number | P/N | PKG code | Pb Free code | Package | Quantity |
| LMP3335SF | LMP3335 | S | F | SOP-8 | 4000pcs |

## Marking Information

| Marking Information | |
|---|---|
| Part Number | LFC code |
| LMP3335SF | □□□□□□ |

## Absolute Maximum Ratings

($T_C$=25ºC Unless otherwise noted)

| Symbol | Parameter | | Typical | Unit |
|---|---|---|---|---|
| $V_{DS}$ | Drain-Source Voltage | | -30 | V |
| $V_{GS}$ | Gate-Source Voltage | | ±20 | V |
| $I_D$ | Continuous Drain Current | $T_A$=25℃ | -20 | A |
| | | $T_A$=70℃ | -16 | |
| $I_{DM}$ | Pulsed Drain Current | | -100 | A |
| $P_D$ | Power Dissipation | $T_A$=25℃ | 3.1 | W |
| | | $T_A$=70℃ | 2 | |
| $T_J$ | Operating Junction Temperature | | -55 to +150 | ℃ |
| $T_{STG}$ | Storage Temperature Range | | -55 to +150 | ℃ |
| $R_{\theta JA}$ | Thermal Resistance, Junction to Ambient (t ≦10s) | | 40 | ℃/W |
| | Thermal Resistance, Junction to Ambient (Steady State) | | 75 | ℃/W |
| $R_{\theta JC}$ | Thermal Resistance, Junction to Case | | 24 | ℃/W |



Notice: The information in this document is subject to change without notice.

## Electrical Characteristics

($T_C$=25ºC Unless otherwise noted)

| Symbol | Parameter | Conditions | Min | Typ | Max | Unit |
|---|---|---|---|---|---|---|
| **Static characteristics** | | | | | | |
| $BV_{DSS}$ | Drain-Source Breakdown Voltage | $V_{GS}$=0V, $I_D$=-250uA | -30 | | | V |
| $V_{GS\ (th)}$ | Gate Threshold Voltage | $V_{DS}$=$V_{GS}$, $I_D$=-250uA | -1.2 | | -2.5 | V |
| $I_{GSS}$ | Gate Leakage Current | $V_{DS}$=0V, $V_{GS}$=±25V | | | ±100 | nA |
| $I_{DSS}$ | Drain-Source Leakage Current | $V_{DS}$=-30V, $V_{GS}$=0V | | | -1 | uA |
| $V_{SD}$ | Diode Forward Voltage | $I_S$=-1A, $V_{GS}$=0V | | | -1 | V |
| $R_{DS(on)}$ | Drain-Source On-Resistance | $V_{GS}$=-10V, $I_D$=-20A | | 4.5 | 5 | mΩ |
| | | $V_{GS}$=-4.5V, $I_D$=-10A | | 6.3 | 7.8 | |
| **Gate charge characteristics** | | | | | | |
| $Q_g$ | Total Gate Charge | $V_{DD}$=-15V, $V_{GS}$=-10V, $I_D$=-10A | | 150 | | nC |
| $Q_{gs}$ | Gate-Source Charge | | | 24 | | |
| $Q_{gd}$ | Gate-Drain Charge | | | 28 | | |
| **Dynamic characteristics** | | | | | | |
| $C_{iss}$ | Input Capacitance | $V_{DS}$=-15V, $V_{GS}$=0V, f=1.0MHz | | 7500 | | pF |
| $C_{oss}$ | Output Capacitance | | | 1200 | | |
| $C_{rss}$ | Reverse Transfer Capacitance | | | 940 | | |
| $t_{d(on)}$ | Turn-On Time | $V_{DD}$=-15V, $V_{GS}$=-10V, $I_{DS}$=-1A, $R_g$=6Ω | | 25 | | ns |
| $t_r$ | | | | 35 | | |
| $t_{d(off)}$ | Turn-Off Time | | | 100 | | |
| $t_f$ | | | | 50 | | |



Notice: The information in this document is subject to change without notice.

## Typical Performance Characteristics

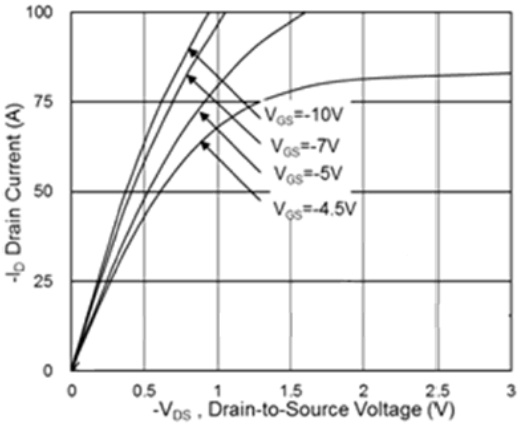


Figure 1. Output Characteristics

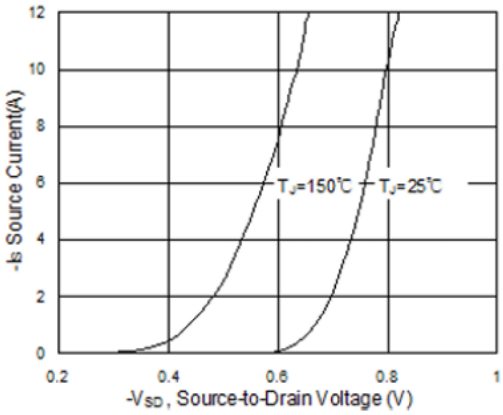


Figure 2. Forward Characteristics of Reverse

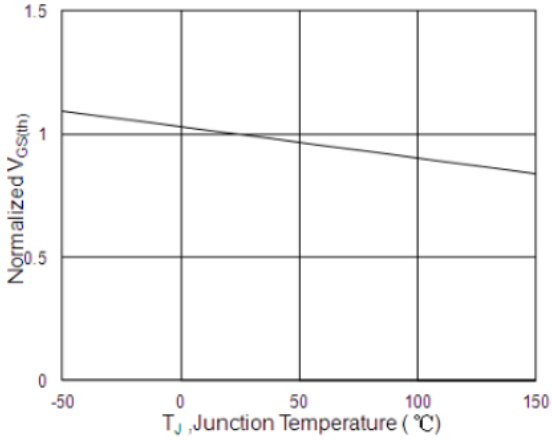


Figure 3. Normalized $V_{GS(th)}$ vs. $T_J$

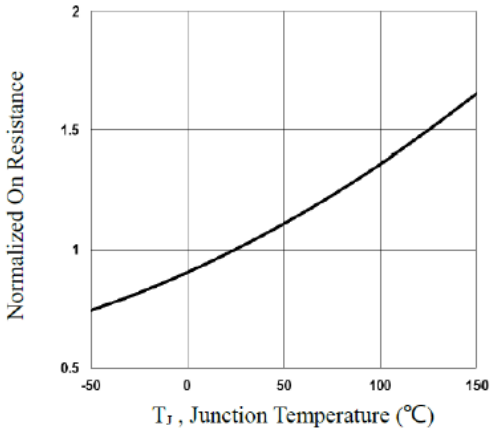


Figure 4. Normalized $R_{DSON}$ vs. $T_J$

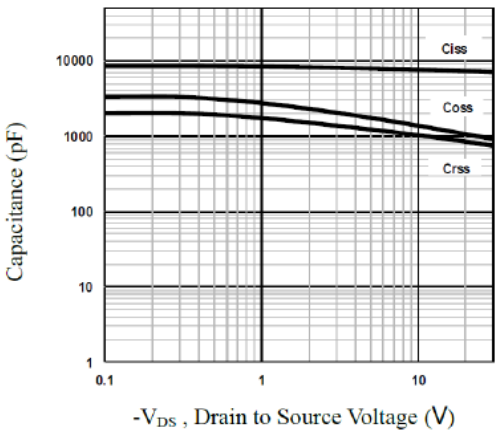


Figure 5. Capacitance

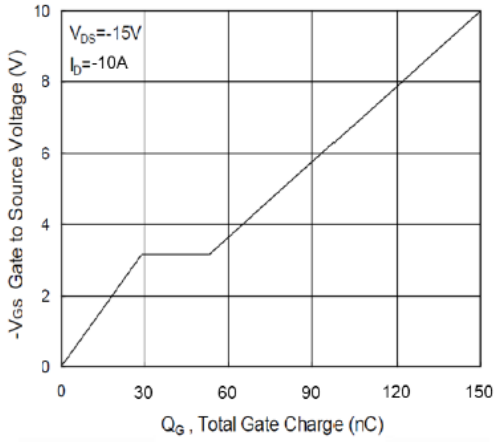


Figure 6. Gate Charge



Notice: The information in this document is subject to change without notice.

## Typical Performance Characteristics(continue)

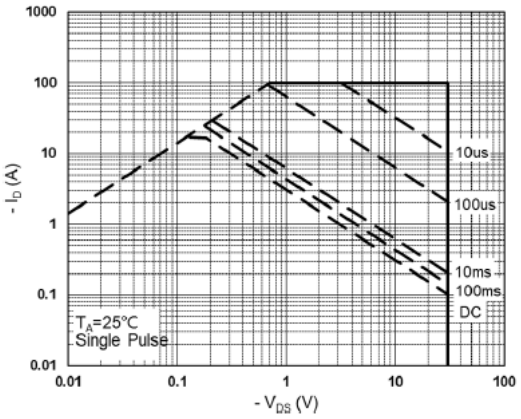


Figure 7. Maximum Safe Operating Area

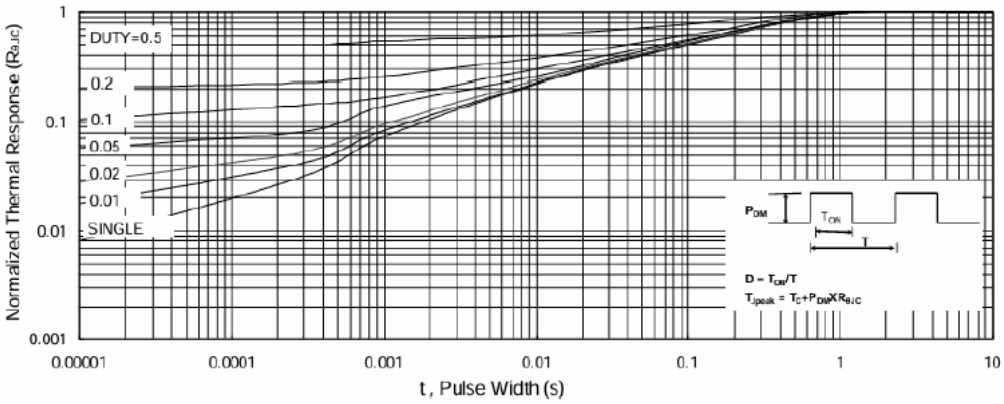


Figure 8. Normalized Transient Thermal Resistance



Notice: The information in this document is subject to change without notice.

**Package Dimension:**

# SOP-8

## Package Dimension

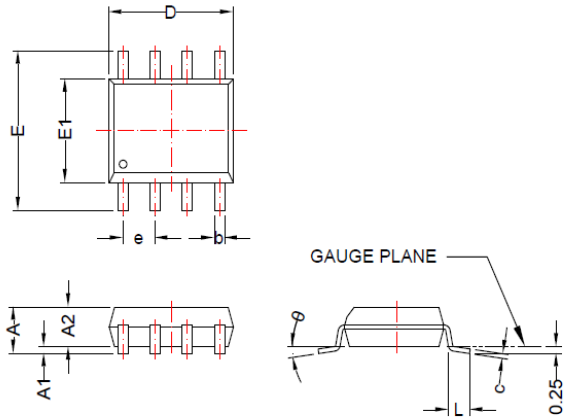


## Recommended Land Pattern

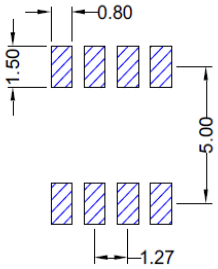


| Dimensions | | | | |
|---|---|---|---|---|
| **Symbol** | **Millimeters** | | **Inches** | |
| | Min | Max | Min | Max |
| **A** | - | 1.75 | - | 0.069 |
| **A1** | 0.10 | 0.15 | 0.004 | 0.006 |
| **A2** | 1.25 | - | 0.049 | - |
| **b** | 0.31 | 0.51 | 0.012 | 0.020 |
| **c** | 0.10 | 0.25 | 0.004 | 0.010 |
| **D** | 4.70 | 5.10 | 0.185 | 0.201 |
| **D1** | 1.50 | - | 0.059 | - |
| **E** | 5.80 | 6.20 | 0.228 | 0.244 |
| **E1** | 3.80 | 4.00 | 0.150 | 0.157 |
| **E2** | 1.00 | - | 0.039 | - |
| **e** | 1.27 BSC | | 0.050 BSC | |
| **L** | 0.40 | 1.27 | 0.016 | 0.050 |
| **θ** | 0° | 8° | 0° | 8° |

NOTE:
Dimensions are exclusive of Burrs, Mold Flash & Tie Bar extrusions.



**Notice: The information in this document is subject to change without notice.**

**NOTICE:**

LFC Semiconductor assumes no responsibility for equipment failures that result from using products at values that exceed, even momentarily, rated values (such as maximum ratings, operating condition ranges, or other parameters) listed in products specifications of any and all LFC Semiconductor products described or contained herein. LFC Semiconductor products are not designed for use in life support appliances, devices or systems where malfunction of these products can be reasonably expected to result in personal injury. Reproduction in whole or in part is prohibited without the prior written consent of the copyright owner.

Applications shown on the herein document are examples of standard use and operation. Customers are responsible in comprehending the suitable use in particular applications. LFC Semiconductor makes no representation or warranty that such applications will be suitable for the specified use without further testing or modification.

Information furnished is believed to be accurate and reliable. However LFC Semiconductor assumes no responsibility for the consequences of use of such information nor for any infringement of patents or other rights of third parties, which may result from its use. No license is granted by implication or otherwise under any patent or patent rights of LFC Semiconductor. Specifications mentioned in this publication are subject to change without notice. This publication supersedes and replaces all information without express written approval of LFC Semiconductor.



Notice: The information in this document is subject to change without notice.