LMNDS02N15SF 150V N-Channel MOSFET

Features

- 150V,1.2A, $R_{DS(ON)}$ =480mΩ@V_{GS} = 10V
- Improved dv/dt capability
- Fast switching
- 100% EAS guaranted

These devices are well suited for high efficiency fast switching applications.

Product Description

These N-Channel enhancement mode power field effect transistors are using trench DMOS technology. This advanced technology has been especially tailored to minimize on-state resistance, provide superior switching performance, and withstand high energy pulse in the avalanche and commutation mode.

Applications

- Networking
- Load Switch
- LED applications

Pin Configuration

LMNDS02N15SF (SOP-8)

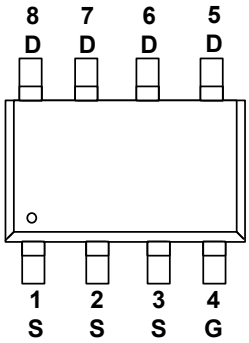

Top Views

PIN	Description	PIN	Description
1	Source	5	Drain
2	Source	6	Drain
3	Source	7	Drain
4	Gate	8	Drain

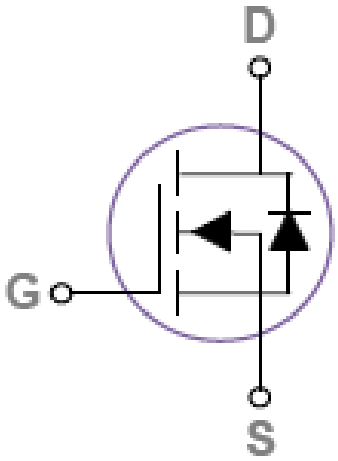

Notice: The information in this document is subject to change without notice.

Ordering Information

Part Number	P/N	PKG Code	Pb Free Code	Package	Quantity Reel
LMNDS02N15SF	LMNDS02N15	S	F	SOP-8	4000 pcs

Marking Information

Part Marking	Part Number	LFC code
02N15S XWMMMM	02N15S	XWMMMM

Absolute Maximum Ratings

(T_A=25ºC Unless otherwise noted)

Symbol	Parameter		Typical	Unit
V_{DS}	Drain-Source Voltage		150	V
V_{GS}	Gate-Source Voltage		±20	V
I_D	Continuous Drain Current	T_A=25ºC	1.2	A
		T_A=100ºC	0.75	
I_{DM}	Pulsed Drain Current		4.8	A
P_D	Power Dissipation(T_A=25ºC)		1.56	W
	Power Dissipation(Derate above 25ºC)		0.012	W/ºC
T_J	Operating Junction Temperature Range		-50 to +150	ºC
T_{STG}	Storage Temperature Range		-50 to +150	ºC
$R_{\theta JA}$	Thermal Resistance-Junction to Ambient		80	ºC/W

Notice: The information in this document is subject to change without notice.
Email:amy@lfc-semi.com www.lfc-semi.com

Electrical Characteristics

(T_A=25ºC Unless otherwise noted)

Symbol	Parameter	Conditions	Min	Typ	Max	Unit
Static						
$V_{(BR)DSS}$	Drain-Source Breakdown Voltage	V_{GS}=0V, I_D=250uA	150			V
$V_{GS(th)}$	Gate Threshold Voltage	V_{DS}=V_{GS}, I_D=250uA	2	3	4	V
I_{GSS}	Gate Leakage Current	V_{DS}=0V, V_{GS}=±20V			±100	nA
I_{DSS}	Zero Gate Voltage Drain Current	V_{DS}=150V, V_{GS}=0V, T_J=25ºC			1	uA
		V_{DS}=120V, V_{GS}=0V, T_J=125ºC			10	
I_{DSS}	Continuous Source Current	V_G=V_D=0V, Force Current			1.2	A
I_{DSS}	Pulsed Source Current				2.4	
$R_{DS(on)}$	Drain-Source On-Resistance	V_{GS}=10V, I_D=1A		380	480	mΩ
		V_{GS}=6V, I_D=0.5A		410	520	
g_{FS}	Forward Transconductance	V_{DS}=10V, I_D=1A		1.7		S
V_{SD}	Diode Forward Voltage	V_{GS}=0V, I_S=1A			1	V
Dynamic						
C_{iss}	Input Capacitance	V_{DS}=25V, V_{GS}=0V, f=1MHz		350	700	pF
C_{oss}	Output Capacitance			34	68	
C_{rss}	Reverse Transfer Capacitance			26	52	
Q_g	Total Gate Charge	V_{DS}=75V, V_{GS}=10V, I_D=1.0A		8.1	16	nC
Q_{gs}	Gate-Source Charge			2	4	
Q_{gd}	Gate-Drain Charge			2.7	5.4	
$t_{d(on)}$	Turn-On Time	V_{DD}=75V, I_D=1.0A, V_{GS}=10V, R_G=10Ω		8.2	16	ns
T_r				5.8	12	
$t_{d(off)}$	Turn-Off Time			14.8	28	
T_f				8.0	16	
R_g	Gate Resistance	V_{DS}=V_{GS}=0V, f=1MHz		2	3	Ω

Notice: The information in this document is subject to change without notice.
Email:amy@lfc-semi.com www.lfc-semi.com

Typical Performance Characteristics

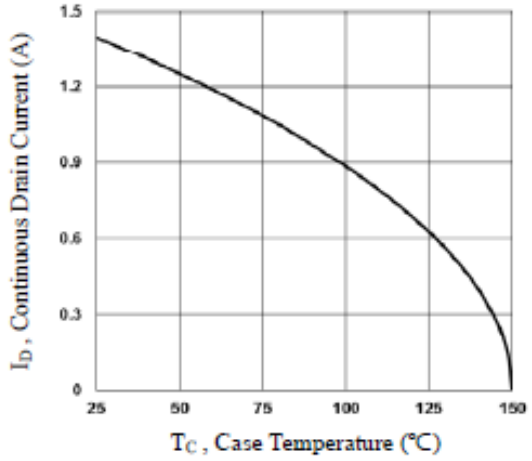

Fig.1 Continuous Drain Current vs. T_c

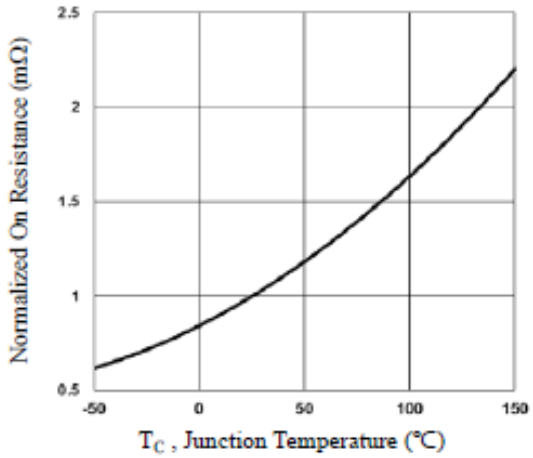

Fig.2 Continuous Drain Current vs. T_c

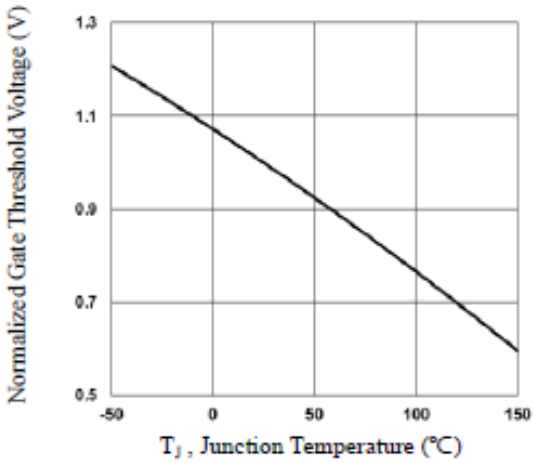

Fig.3 Normalized V_{th} vs. T_J

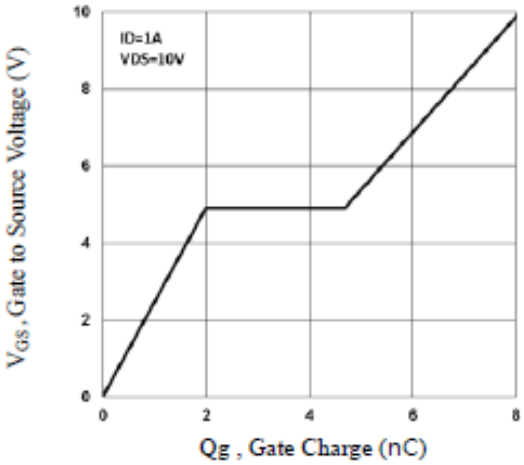

Fig.4 Gate Charge Waveform

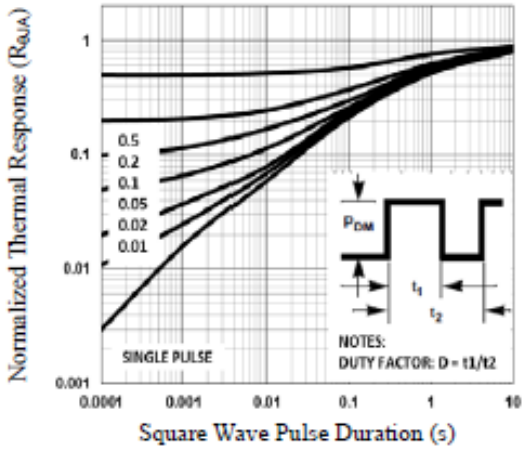

Fig.5 Normalized Transient Impedance

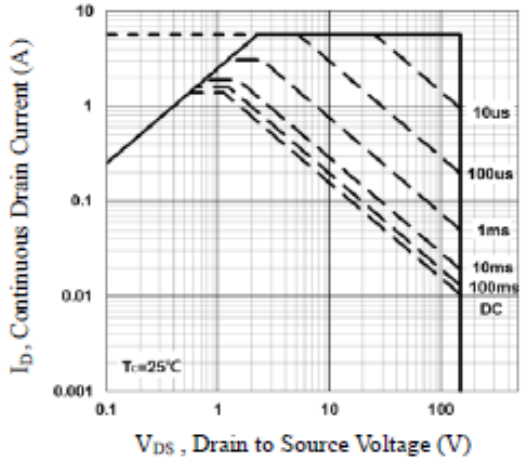

Fig.6 Maximum Safe Operation Area

Notice: The information in this document is subject to change without notice.

Email:amy@lfc-semi.com www.lfc-semi.com

Typical Performance Characteristics (continue.)

Gate Charge Test Circuit & Waveform

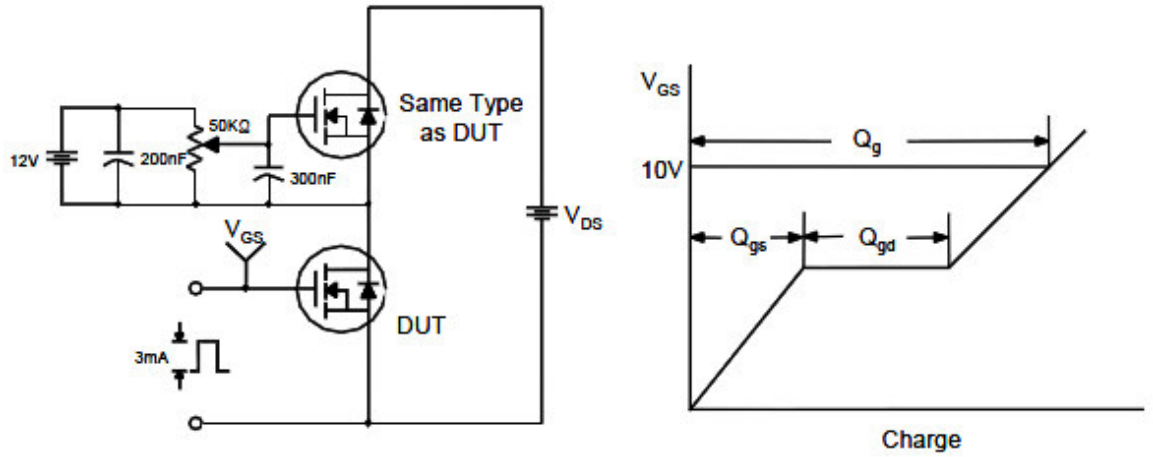

Resistive Switching Test Circuit & Waveforms

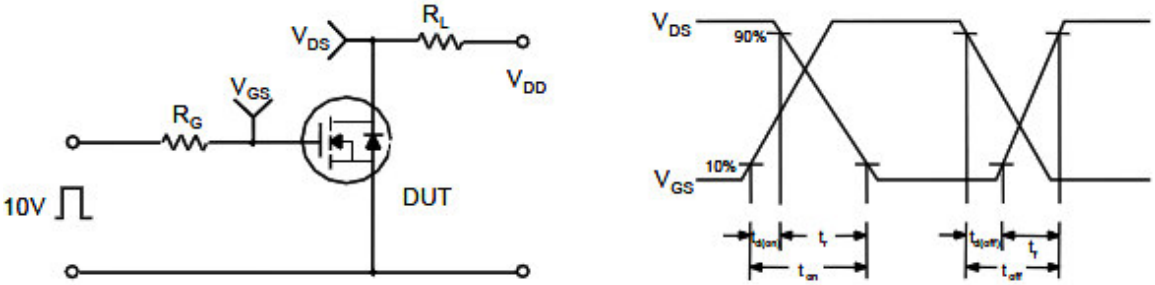

Unclamped Inductive Switching Test Circuit & Waveforms

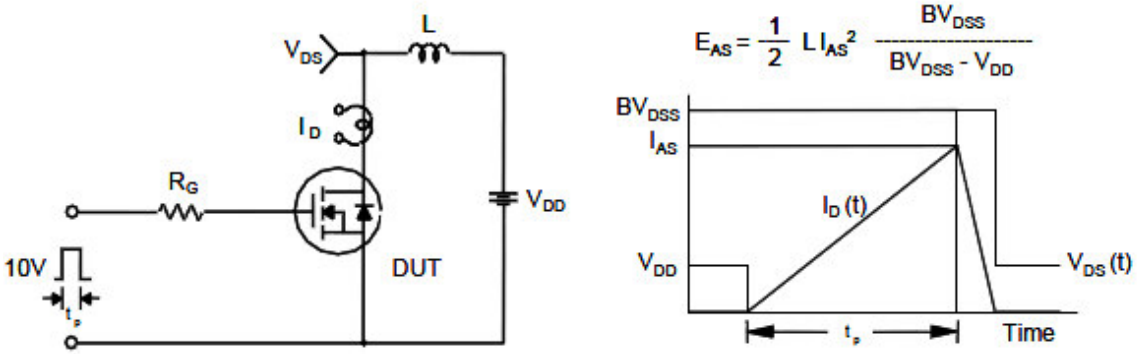

Notice: The information in this document is subject to change without notice.
Email:amy@lfc-semi.com www.lfc-semi.com

Package Dimension

SOP-8

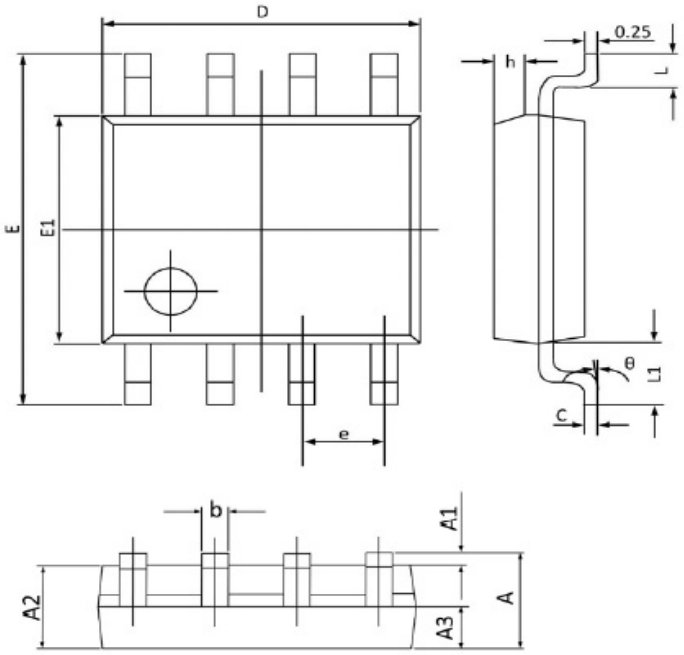

Dimensions				
Symbol	Millimeters		Inches	
	Min	Max	Min	Max
A	1.350	1.750	0.053	0.068
A1	0.100	0.250	0.004	0.009
A2	1.300	1.500	0.052	0.059
A3	0.600	0.700	0.024	0.027
b	0.390	0.480	0.016	0.018
c	0.210	0.260	0.009	0.010
D	4.700	5.100	0.186	0.200
E	5.800	6.200	0.229	0.244
E1	3.700	4.100	0.146	0.161
e	1.270 BSC		0.050 BSC	
h	0.250	0.500	0.010	0.019
L	0.500	0.800	0.019	0.031
L1	1.050 BSC		0.041 BSC	
θ	0°	8°	0°	8°

Notice: The information in this document is subject to change without notice.
Email:amy@lfc-semi.com www.lfc-semi.com