LMNBSS139W 60V N-Channel MOSFET

Features

- 60V, 0.24A, $R_{DS(ON)}$=2.5Ω@V_{GS}=4.5V
- Improved dv/dt capability
- Fast switching
- Green Device Available
- SOT-323 Package Design
- ESD Protected: 1500V

These devices are well suited for high efficiency fast switching applications.

Product Description

These N-Channel enhancement mode power field effect transistors is using trench DMOS technology. This advanced technology has been especially tailored to minimize on-state resistance, provide superior switching performance, and withstand high energy pulse in the avalanche and commutation mode.

Applications

- Notebook
- Load Switch
- LED applications

Pin Configuration

LMNBSS139WX5F (SOT-323)

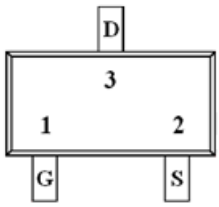

Top Views

Pin	Description
1	Gate
2	Source
3	Drain

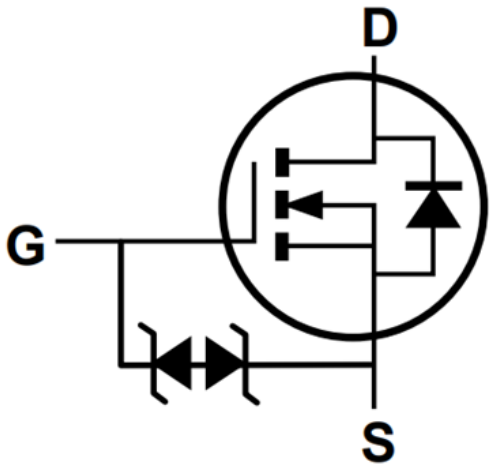

Notice: The information in this document is subject to change without notice.

Ordering Information

Part Number	P/N	PKG Code	Pb Free Code	Package	Quantity Reel
LMNBSS139WX5F	LMNBSS139W	X5	F	SOT-323	3000 pcs

Marking Information

Part Marking	Part Number	LFC code
J2 XM	J2	XM

Absolute Maximum Ratings

(T_A=25ºC Unless otherwise noted)

Symbol	Parameter	Limits	Unit
V_{DSS}	Drain-Source Voltage	60	V
V_{GSS}	Gate-Source Voltage	±20	V
I_D	Continuous Drain Current(T_A=25ºC)	0.24	A
I_{DM}	Pulsed Drain Current	0.8	A
P_D	Total Power Dissipation(T_A=25ºC)	0.23	W
T_J	Operating Junction Temperature Range	-55 to +150	ºC
T_{STG}	Storage Temperature Range	-55 to +150	ºC
$R_{\theta JA}$	Thermal Resistance-Junction to Ambient	556	ºC/W
TL	Maximum Lead Temperature for Soldering Purpose, for 10 Seconds	260	ºC

Notice: The information in this document is subject to change without notice.

Electrical Characteristics

(T_A=25ºC Unless otherwise noted)

Symbol	Parameter	Conditions	Min	Typ	Max	Unit
Static						
BV_{DSS}	Drain-Source Breakdown Voltage	V_{GS}=0V, I_D=250uA	60			V
$V_{GS(th)}$	Gate Threshold Voltage	V_{DS}=V_{GS}, I_D=250uA	0.8		1.5	V
I_{GSS}	Gate Leakage Current	V_{DS}=0V, V_{GS}=±20V			±10	uA
I_{DSS}	Drain-Source Leakage Current	V_{DS}=25V, V_{GS}=0V			0.1	uA
		V_{DS}=50V, V_{GS}=0V			0.5	
I_S	Continuous Source Current	V_G=V_D=0V, Force Current			2	A
I_{SM}	Pulsed Source Current				8	
$R_{DS(on)}$	Drain-Source On-Resistance	V_{GS}=4.5V, I_D=0.2A			2.5	Ω
		V_{GS}=2.5V, I_D=0.1A			4	
g_{FS}	Forward Transconductance	V_{DS}=25V, I_D=0.2A	0.1			S
Dynamic						
C_{iss}	Input Capacitance	V_{DS}=25V, V_{GS}=0V, f=1MHz		22.8		pF
C_{oss}	Output Capacitance			3.5		
C_{rss}	Reverse Transfer Capacitance			2.9		
$t_{d(on)}$	Turn-On Delay Time	V_{DD}=30V, I_D=01A, V_{GS}=10V, R_G=25Ω		3.8		ns
$t_{d(off)}$	Turn-Off Delay Time			19		

Notice: The information in this document is subject to change without notice.

Typical Performance Characteristics

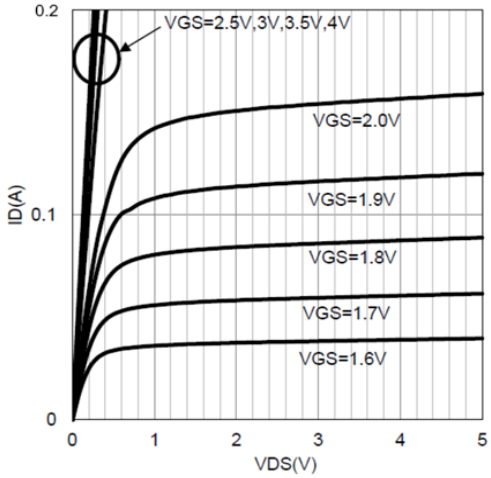

Fig.1 Typical Output Characteristics

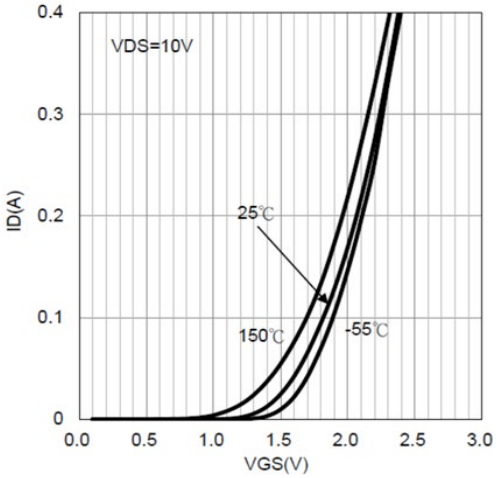

Fig.2 Typical Transfer Characteristics

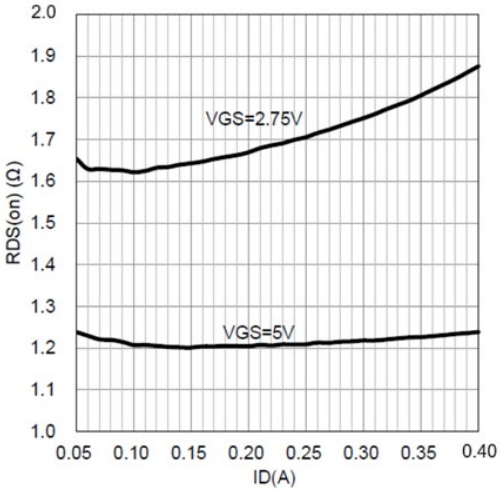

Fig.4 Typical On-Resistance vs. I_D and V_{GS}

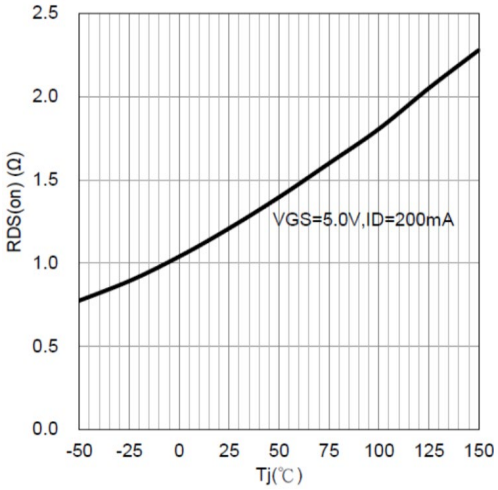

Fig.3 Typical Drain-Source On-Resistance vs. Junction Temperature

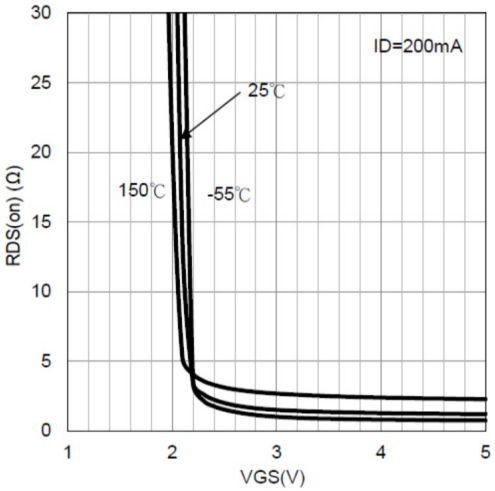

Figure 5. Drain-Source On-State Resistance vs.V_{GS}

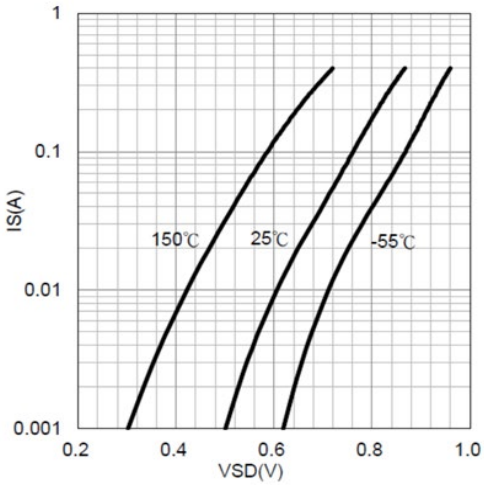

Fig. 6 Diode Forward Voltage vs. Current

Notice: The information in this document is subject to change without notice.

Typical Performance Characteristics (continue.)

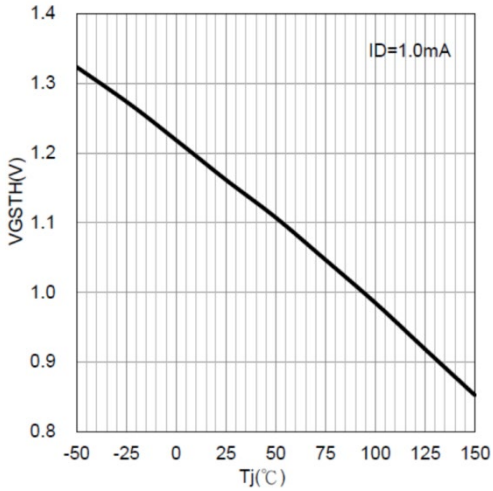

Fig.7 Gate Threshold Voltage vs. T_J

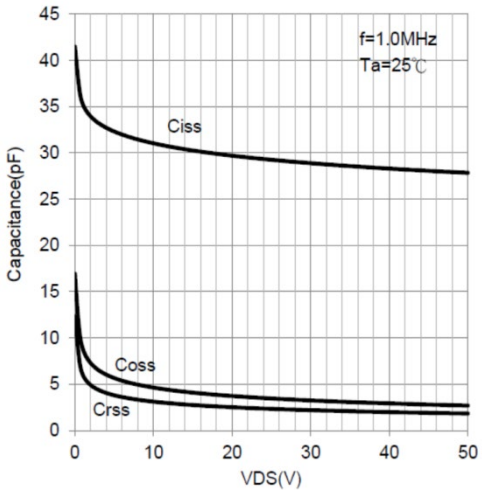

Fig.8 Capacitance vs. V_{DS}

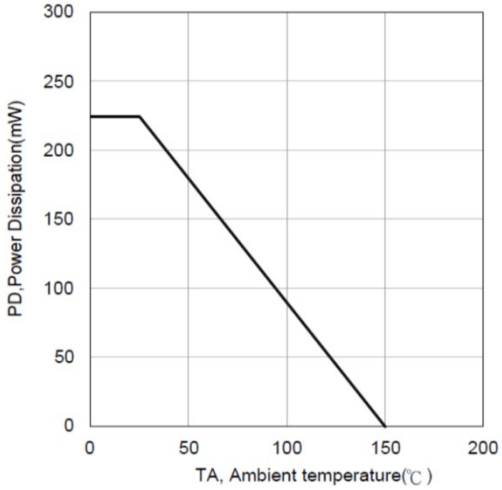

Fig.9 Power Dissipation vs. Ambient Temperature

Notice: The information in this document is subject to change without notice.

Package Dimension

SOT-323

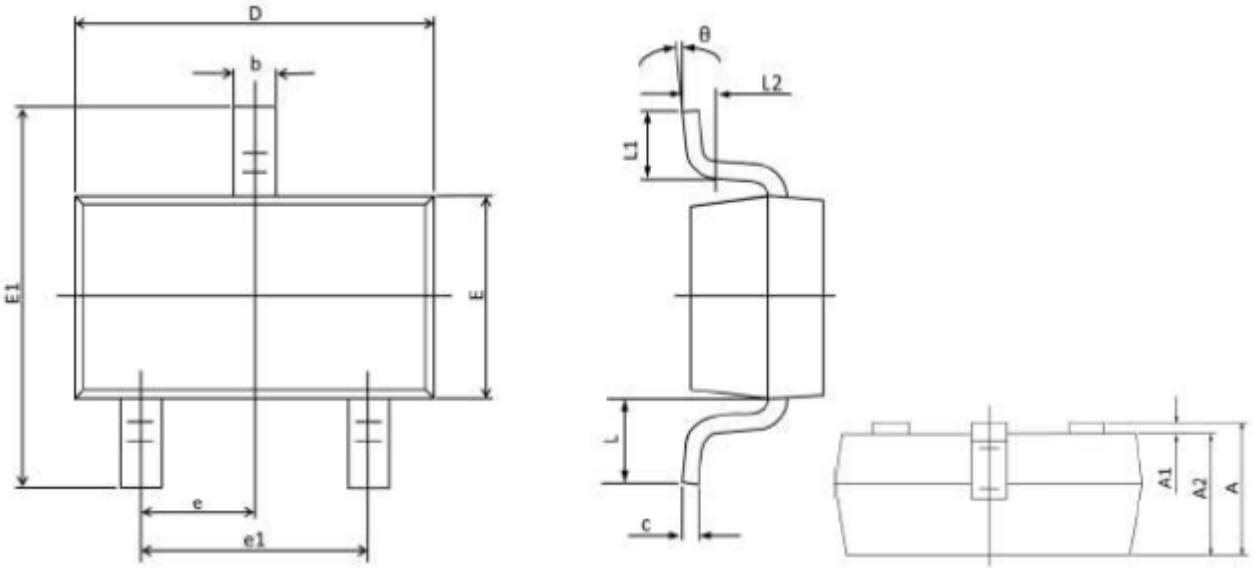

Dimensions				
Symbol	Millimeters		Inches	
	Min	Max	Min	Max
A	0.800	1.100	0.031	0.043
A1	0.000	0.100	0.000	0.004
A2	0.800	1.000	0.031	0.039
b	0.200	0.400	0.008	0.016
c	0.080	0.250	0.003	0.010
D	1.800	2.200	0.071	0.087
E	1.150	1.350	0.045	0.053
E1	1.800	2.450	0.071	0.096
e	0.650 BSC		0.026 BSC	
e1	1.200	1.400	0.047	0.055
L	0.525 REF		0.021 REF	
L1	0.150	0.460	0.006	0.018
L2	0.000	0.200	0.000	0.008
θ	0º	8º	0º	8º

Notice: The information in this document is subject to change without notice.