LMN3612PJZF 30V N-Channel MOSFET

Features

- 30V, 5.3A, $R_{DS(ON)}$=36mΩ@V_{GS}=4.5V
- Improved dv/dt capability
- Fast switching
- Suit for 2.5V Gate Drive Applications
- Green Device Available
- SOT-23 package design

Product Description

These N-Channel enhancement mode power field effect transistors are using trench DMOS technology. This advanced technology has been especially tailored to minimize on-state resistance, provide superior switching performance, and withstand high energy pulse in the avalanche and commutation mode.

These devices are well suited for high efficiency fast switching applications.

Applications

- Notebook
- Load Switch
- LED applications

Pin Configuration

LMN3612PJZF (SOT-23)

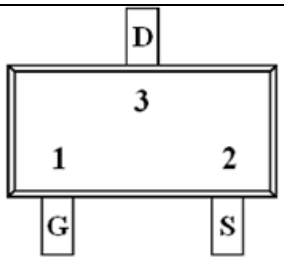

Transparent top view

Pin	Description
1	Gate
2	Source
3	Drain

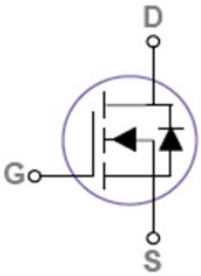

Notice: The information in this document is subject to change without notice.

Ordering Information

Ordering Information					
Part Number	P/N	PKG code	Pb Free code	Package	Quantity
LMN3612PJZF	LMN3612P	JZ	F	SOT-23	3000 PCS

Marking Information

Marking Information		
Part Marking	Part Number	LFC code
PXWMM	P	XWMM

Absolute Maximum Ratings

(T_C=25ºC Unless otherwise noted)

Symbol	Parameter		Typical	Unit
V_{DSS}	Drain-Source Voltage		30	V
V_{GSS}	Gate-Source Voltage		±12	V
I_D	Continuous Drain Current	T_A=25℃	5.3	A
		T_C=100℃	3.4	
I_{DM}	Pulsed Drain Current[2]		21.2	A
P_D	Power Dissipation (Tc=25℃)		1.56	W
	Power Dissipation (Derate above 25℃)		0.012	
T_J	Operating Junction Temperature		-55 to +150	℃
T_{STG}	Storage Temperature Range		-55 to +150	℃
$R_{\theta JA}$	Thermal Resistance-Junction to Ambient[1]		80	℃/W

Notice: The information in this document is subject to change without notice.

Electrical Characteristics

(T_C=25ºC Unless otherwise noted)

Symbol	Parameter	Conditions	Min	Typ	Max	Unit
Static						
$V_{(BR)DSS}$	Drain-Source Breakdown Voltage	V_{GS}=0V, I_D=250uA	30			V
$\triangle BV_{DSS}/\triangle T_J$	BV_{DSS} Temperature Coefficient	Reference to 25℃, I_D=1mA		0.06		V/℃
$V_{GS(th)}$	Gate Threshold Voltage	V_{DS}=V_{GS}, I_D=250uA	0.4	0.6	0.9	V
$\triangle V_{GS(th)}$	$V_{GS(th)}$ Temperature Coefficient			-3		mV/℃
I_{GSS}	Gate Leakage Current	V_{DS}=0V, V_{GS}=±12V			±100	nA
I_{DSS}	Zero Gate Voltage Drain Current	V_{DS}=30V, V_{GS}=0V			1	uA
		V_{DS}=24V, V_{GS}=0V, T_J=125℃			10	
I_S	Continuous Source Current	V_G=V_D=0V, Force Current			5.3	A
I_{SM}	Pulsed Source Current				21.2	
$R_{DS(on)}$	Drain-Source On-Resistance	V_{GS}=4.5V, I_D=4A		31	36	mΩ
		V_{GS}=2.5V, I_D=3A		36	45	
g_{FS}	Forward Transconductance	V_{DS}=10V, I_D=3A		7		S
V_{SD}	Diode Forward Voltage	I_S=1A, V_{GS}=0V			1	V
Dynamic						
Q_g	Total Gate Charge[2,3]	V_{DS}=10V, V_{GS}=4.5V, I_D=4A		8.4	12	nC
Q_{gs}	Gate-Source Charge[2,3]			1	2	
Q_{gd}	Gate-Drain Charge[2,3]			2.2	4	
C_{iss}	Input Capacitance	V_{DS}=10V, V_{GS}=0V, f=1MHz		695	1000	pF
C_{oss}	Output Capacitance			45	65	
C_{rss}	Reverse Transfer Capacitance			36	50	
$t_{d(on)}$	Turn-On Time[2,3]	V_{DD}=10V, I_D=1A, V_{GS}=4.5V, R_G=25Ω		4.5	9	ns
t_r				13	25	
$t_{d(off)}$	Turn-Off Time[2,3]			27	51	
t_f				8.3	16	
R_g	Gate Resistance	V_{DS}=0V, V_{GS}=0V, f=1MHz		1.5	3	Ω

Note:

1. Repetitive Rating: Pulsed width limited by maximum junction temperature.
2. The data tested by pulsed , pulse width ≤300us , duty cycle ≤2%.
3. Essentially independent of operating temperature.

Notice: The information in this document is subject to change without notice.

Typical Performance Characteristics

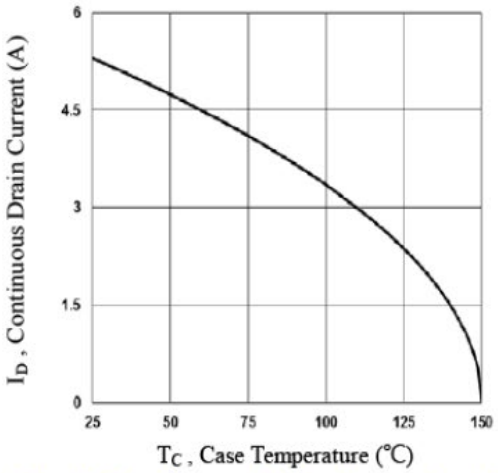

Fig.1 Continuous Drain Current vs. T_c

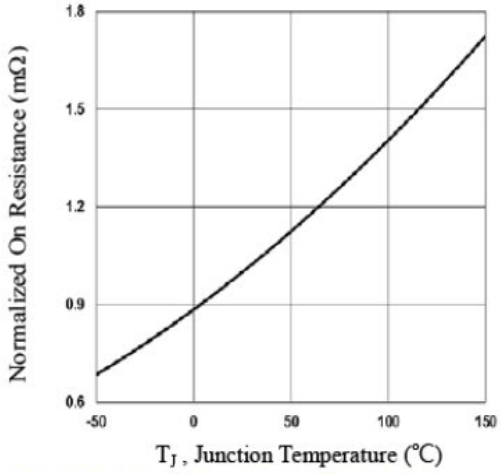

Fig.2 Normalized RDSON vs. T_J

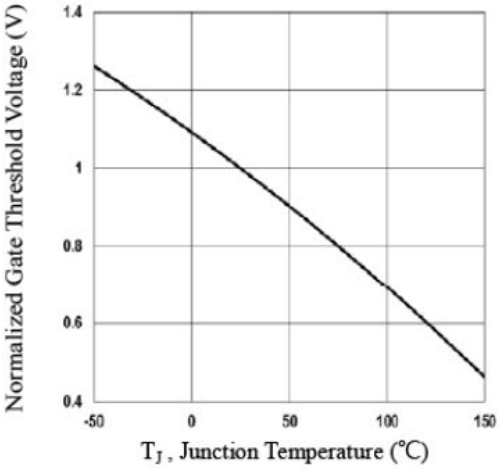

Fig.3 Normalized V_{th} vs. T_J

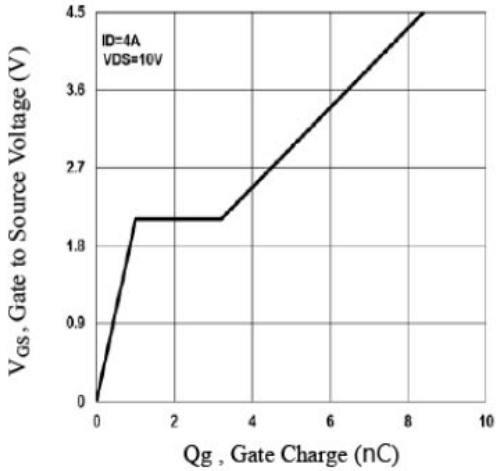

Fig.4 Gate Charge Waveform

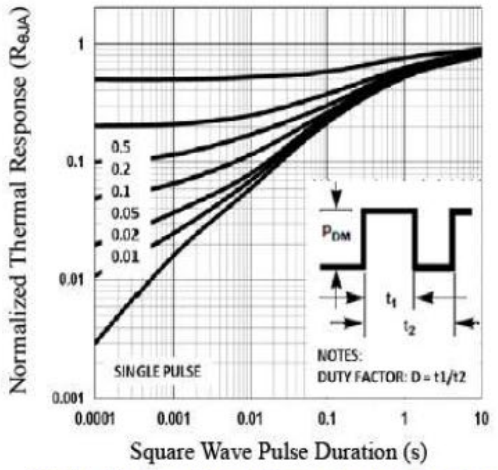

Fig.5 Normalized Transient Impedance

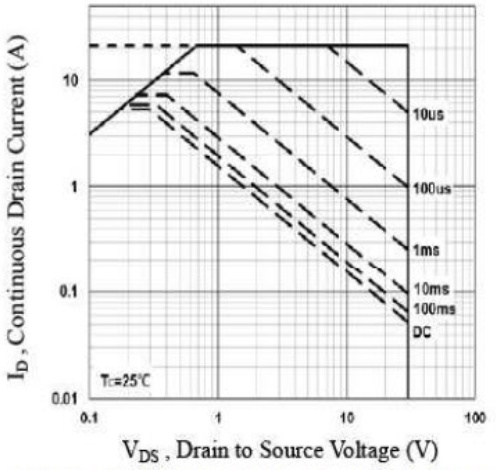

Fig.6 Maximum Safe Operation Area

Notice: The information in this document is subject to change without notice.

Typical Performance Characteristics(continue)

Gate Charge Test Circuit & Waveform

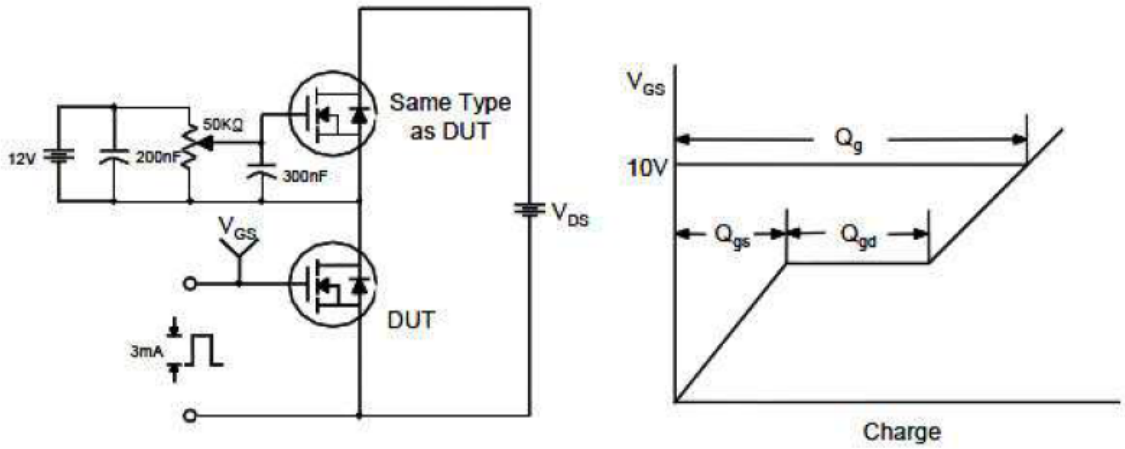

Resistive Switching Test Circuit & Waveforms

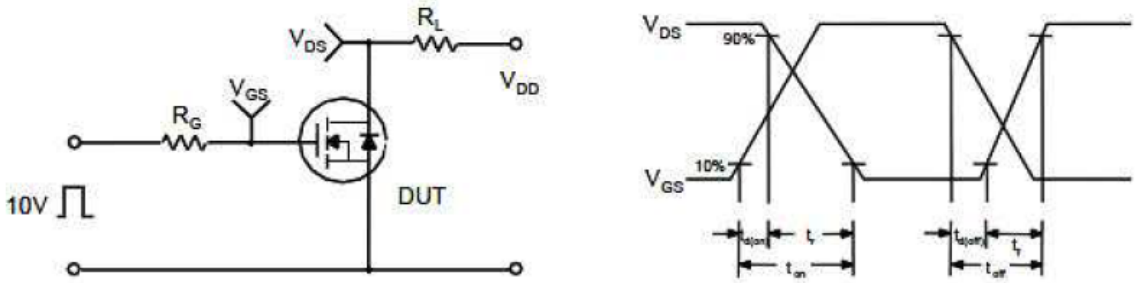

Unclamped Inductive Switching Test Circuit & Waveforms

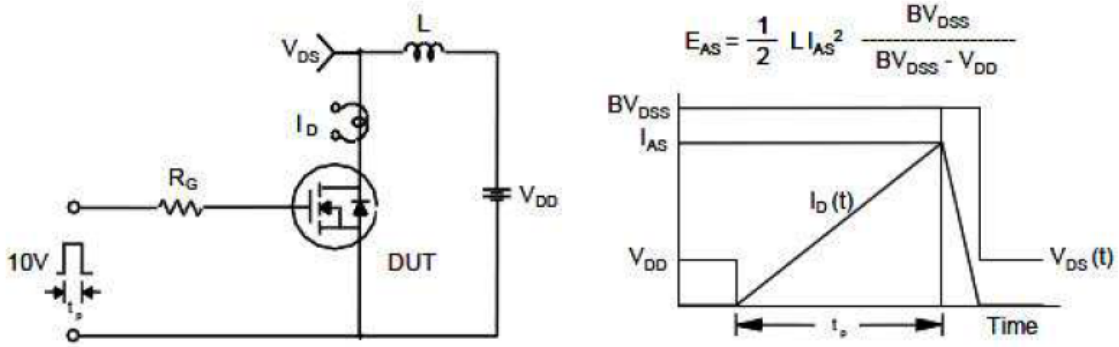

Notice: The information in this document is subject to change without notice.

Package Dimension:

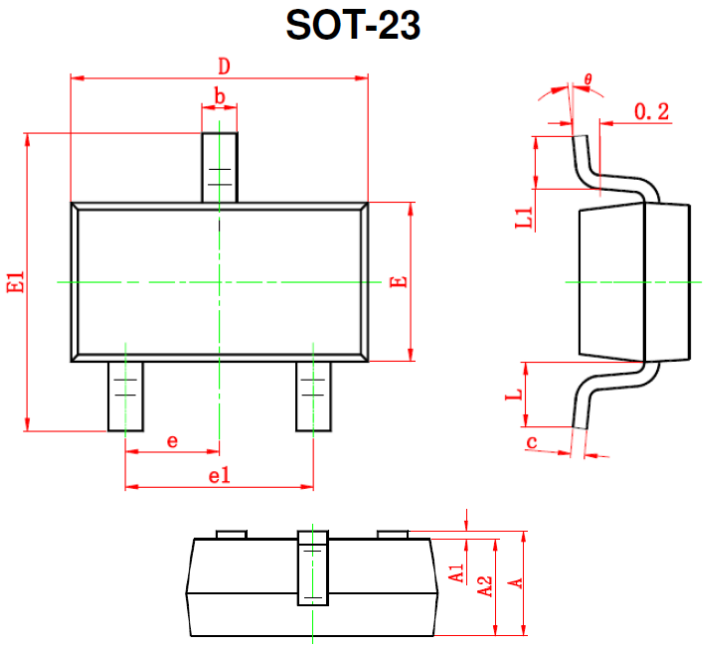

Dimensions				
Symbol	Millimeters		Inches	
	Min	Max	Min	Max
A	0.90	1.20	0.035	0.043
A1	0.00	0.10	0.000	0.004
A2	0.90	1.10	0.035	0.039
b	0.30	0.50	0.012	0.020
c	0.08	0.15	0.003	0.006
D	2.80	3.00	0.110	0.118
E	1.20	1.40	0.047	0.055
E1	2.25	2.55	0.089	0.10
e	0.95 TYP		0.037 TYP	
e1	1.80	2.00	0.071	0.079
L	0.55 REF		0.022 REF	
L1	0.30	0.50	0.012	0.020
θ	0°	8°	0°	8°

Notice: The information in this document is subject to change without notice.

NOTICE:

LFC Semiconductor assumes no responsibility for equipment failures that result from using products at values that exceed, even momentarily, rated values (such as maximum ratings, operating condition ranges, or other parameters) listed in products specifications of any and all LFC Semiconductor products described or contained herein. LFC Semiconductor products are not designed for use in life support appliances, devices or systems where malfunction of these products can be reasonably expected to result in personal injury. Reproduction in whole or in part is prohibited without the prior written consent of the copyright owner.

Applications shown on the herein document are examples of standard use and operation. Customers are responsible in comprehending the suitable use in particular applications. LFC Semiconductor makes no representation or warranty that such applications will be suitable for the specified use without further testing or modification.

Information furnished is believed to be accurate and reliable. However LFC Semiconductor assumes no responsibility for the consequences of use of such information nor for any infringement of patents or other rights of third parties, which may result from its use. No license is granted by implication or otherwise under any patent or patent rights of LFC Semiconductor. Specifications mentioned in this publication are subject to change without notice. This publication supersedes and replaces all information without express written approval of LFC Semiconductor.

Notice: The information in this document is subject to change without notice.