LMN3368ASF 30V N-Channel Enhancement Mode MOSFETs

Features

- $R_{DS(ON)}$ =6mΩ @ V_{GS}=10V
- $R_{DS(ON)}$ =9.8mΩ @ V_{GS}=4.5V
- SOP-8 Package

Product Description

The N-Channel enhancement mode power field effect transistor is using trench DMOS technology. This advanced technology has been especially tailored to minimize on-state resistance, provide superior switching performance, and withstand high energy pulse in the avalanche and commutation mode.

The device is well suited for high efficiency fast switching applications.

Applications

- MB / VGA / Vcore
- POL
- SMPS

Pin Configuration

LMN3368ASF (SOP-8)

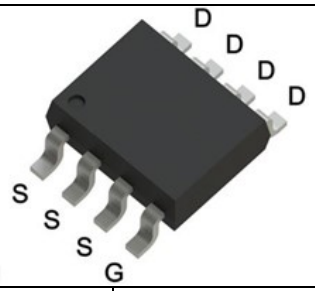

PIN	Description
1,2,3	Source
4	Gate
5,6,7,8	Drain

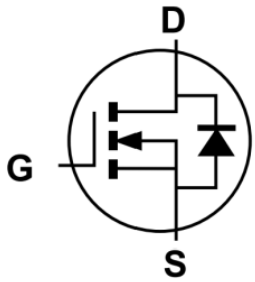

Notice: The information in this document is subject to change without notice.

Ordering Information

Part Number	Part Marking	Package	Quantity
LMN3368ASF	3368ASF	SOP-8	4000 PCS

Marking Information

Part Marking	Package Code	Green Level:	Product Code:
3368ASF	1 is S for SOP-8	2 is F for RoHS Compliant and Halogen Free	LMN3368ASF

Absolute Maximum Ratings

(T_C=25ºC Unless otherwise noted)

Symbol	Parameter		Typical	Unit
V_{DSS}	Drain-Source Voltage		30	V
V_{GSS}	Gate-Source Voltage		±20	V
I_D	Continuous Drain Current[1]	T_A=25ºC	13	A
		T_A=70ºC	10	
I_{DM}	Pulsed Drain Current[2]		65	A
P_D	Power Dissipation[3]	T_A=25ºC	1.5	W
		T_A=70ºC	1	
T_J	Operating Junction Temperature		-55 to +150	℃
T_{STG}	Storage Temperature Range		-55 to +150	℃
$R_{\theta JA}$	Thermal Resistance-Junction to Case[1]		80	℃/W

Note:
1. The data tested by surface mounted on a 1 inch2 FR-4 board with 2oz copper.
2. The data tested by pulsed, pulse width ≤ 300us, duty cycle ≤ 2%.
3. The power dissipation is limited by 150ºC junction temperature.

Notice: The information in this document is subject to change without notice.

Electrical Characteristics

(T_C=25ºC Unless otherwise noted)

Symbol	Parameter	Conditions	Min	Typ	Max	Unit
Static						
BV_{DSS}	Drain-Source Breakdown Voltage	V_{GS}=0V, I_D=250uA	30			V
$V_{GS(th)}$	Gate Threshold Voltage	V_{DS}=V_{GS}, ID=250uA	1.2		2.5	
I_{GSS}	Gate Leakage Current	V_{DS}=0V, V_{GS}=±20V			±100	nA
I_{DSS}	Zero Gate Voltage Drain Current	V_{DS}=30V, V_{GS}=0V			1	uA
$R_{DS(on)}$	Drain-Source On-Resistance	V_{GS}=10V, I_D=15A		4.2	6	mΩ
		V_{GS}=4.5V, I_D=10A		5.6	9.8	
V_{SD}	Diode Forward Voltage	I_S=20A, V_{GS}=0V			1.2	V
Dynamic						
Q_g	Total Gate Charge	V_{DS}=15V, V_{GS}=10V, I_D=15A		39		nC
Q_{gs}	Gate-Source Charge			7.6		
Q_{gd}	Gate-Drain Charge			7.2		
C_{iss}	Input Capacitance	V_{DS}=15V, V_{GS}=0V, f=1MHz		2295		pF
C_{oss}	Output Capacitance			267		
C_{rss}	Reverse Transfer Capacitance			210		
$t_{d(on)}$	Turn-On Time	V_{DD}=15V, I_D=15A, V_{GS}=10V, R_G=3.3Ω		7.8		ns
t_r				15		
$t_{d(off)}$	Turn-Off Time			37		
t_f				11		
R_g	Gate Resistance	V_{DS}=0V, V_{GS}=0V, f=1MHz		1.7		Ω

Notice: The information in this document is subject to change without notice.

Typical Performance Characteristics

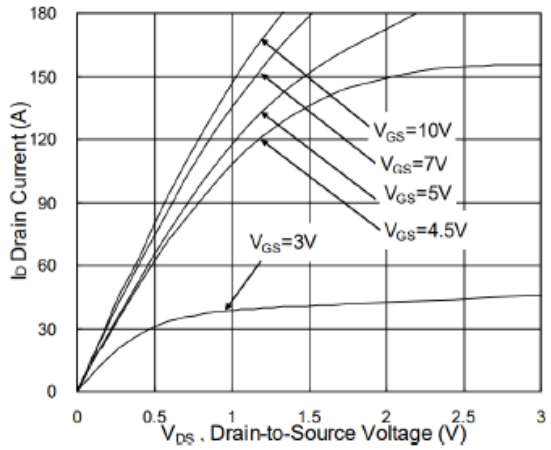

Figure 1. Typical Output Characteristics

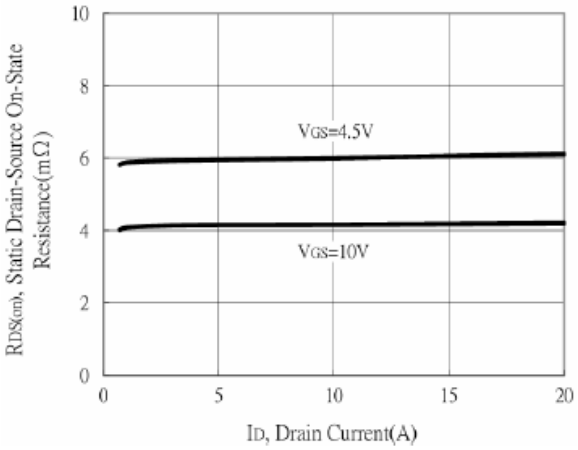

Figure 2. Drain-Source On-State resistance vs Drain Current

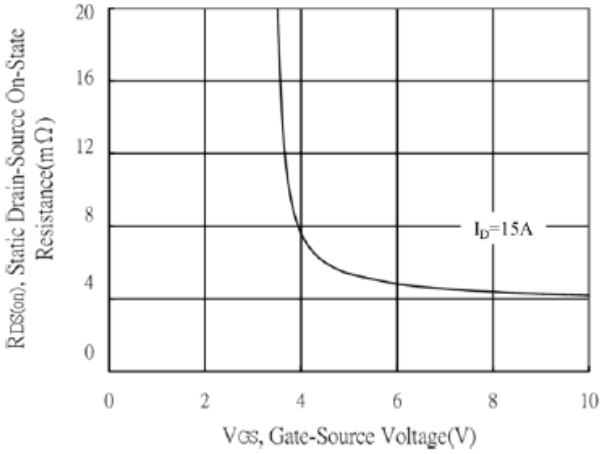

Figure 3. Drain-Source On-State Resistance vs Gate-Source Voltage

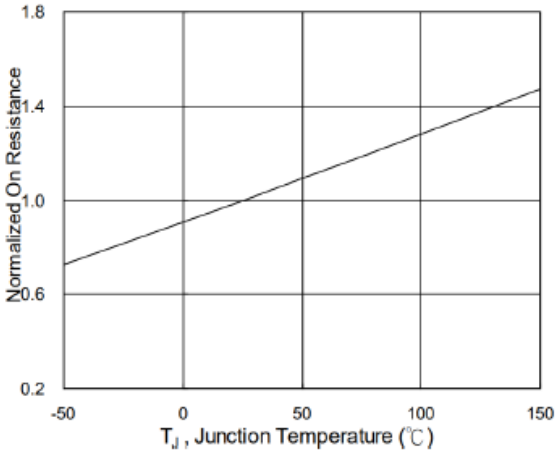

Figure 4. Drain-Source On-State Resistance vs Junction Temperature

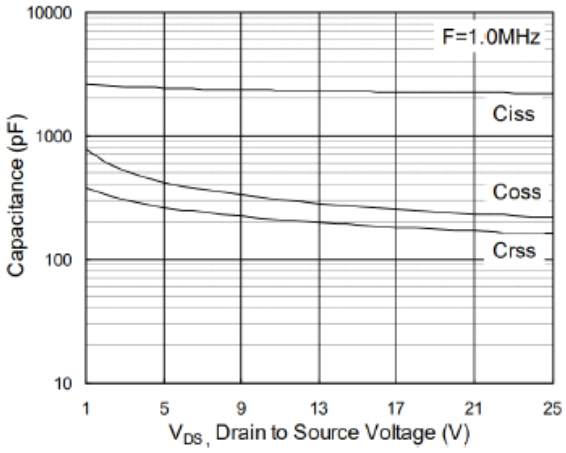

Figure 5. Capacitance vs Drain-to-Source Voltage

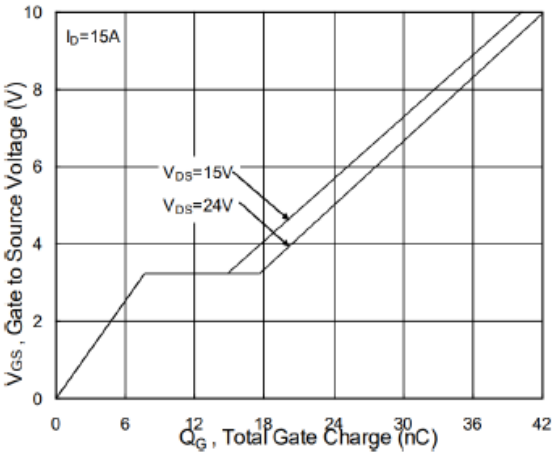

Figure 6. Gate Charge

Notice: The information in this document is subject to change without notice.

Typical Performance Characteristics(continue)

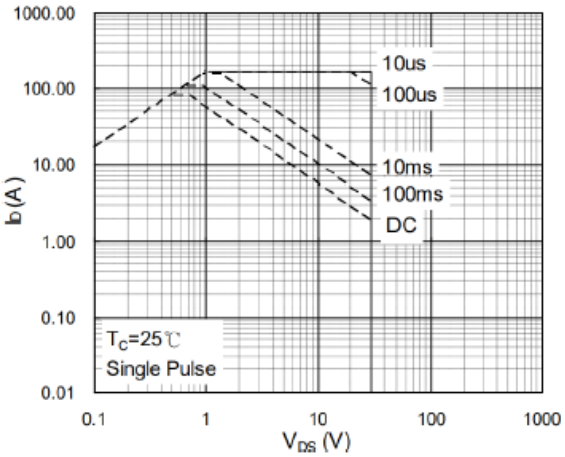

Figure 7. Maximum Safe Operating Area

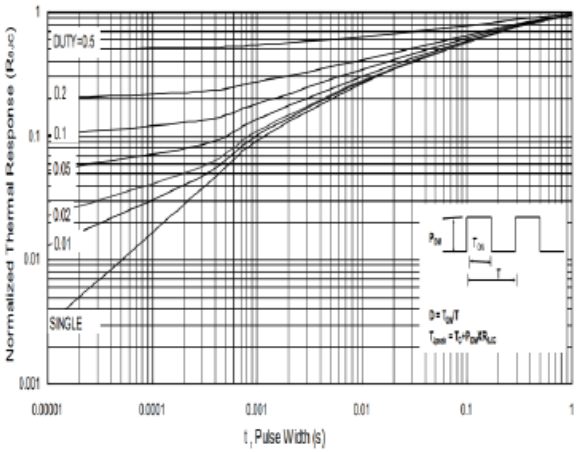

Figure 8. Normalized Transient Thermal Resistance

Notice: The information in this document is subject to change without notice.

Package Dimension:

SOP-8

Package Dimension

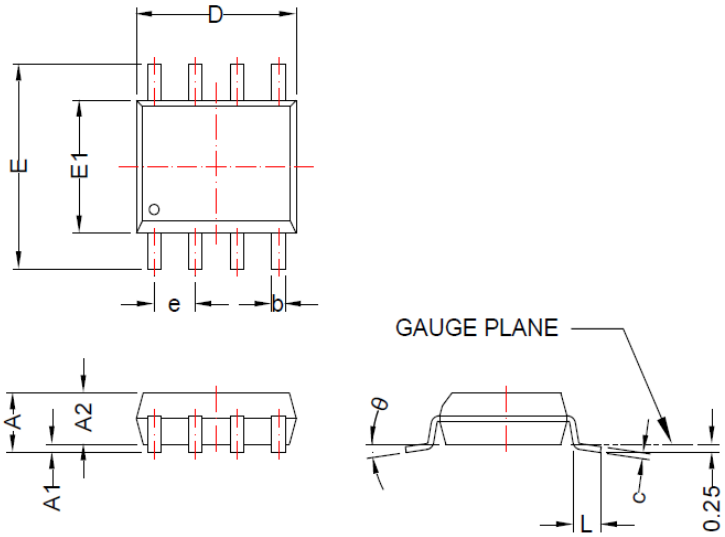

Recommended Land Pattern

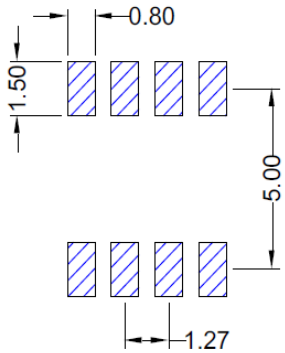

Dimensions				
Symbol	**Millimeters**		**Inches**	
	Min	Max	Min	Max
A	-	1.75	-	0.069
A1	0.10	0.25	0.004	0.010
A2	1.25	-	0.049	-
b	0.31	0.51	0.012	0.020
c	0.10	0.25	0.004	0.010
D	4.70	5.10	0.185	0.201
E	5.80	6.20	0.228	0.244
E1	3.80	4.00	0.150	0.157
e	1.27BSC		0.050BSC	
L	0.40	1.27	0.016	0.050
θ	0°	8°	0°	8°

NOTE:
DIMENSION D DOES NOT INCLUDE MOLD FLASH, PROTRUSIONS OR GATE BURRS. MOLD FLASH, PROTRUSIONS OR GATE BURRS SHALL NOT EXCEED 0.15 mm PER END.

Notice: The information in this document is subject to change without notice.

NOTICE:

LFC Semiconductor assumes no responsibility for equipment failures that result from using products at values that exceed, even momentarily, rated values (such as maximum ratings, operating condition ranges, or other parameters) listed in products specifications of any and all LFC Semiconductor products described or contained herein. LFC Semiconductor products are not designed for use in life support appliances, devices or systems where malfunction of these products can be reasonably expected to result in personal injury. Reproduction in whole or in part is prohibited without the prior written consent of the copyright owner.

Applications shown on the herein document are examples of standard use and operation. Customers are responsible in comprehending the suitable use in particular applications. LFC Semiconductor makes no representation or warranty that such applications will be suitable for the specified use without further testing or modification.

Information furnished is believed to be accurate and reliable. However LFC Semiconductor assumes no responsibility for the consequences of use of such information nor for any infringement of patents or other rights of third parties, which may result from its use. No license is granted by implication or otherwise under any patent or patent rights of LFC Semiconductor. Specifications mentioned in this publication are subject to change without notice. This publication supersedes and replaces all information without express written approval of LFC Semiconductor.

Notice: The information in this document is subject to change without notice.