LM3414S 20V N-Channel Enhancement Mode MOSFET

Features

- 20V/5.8A, $R_{DS(ON)}$=25mΩ@V_{GS}=4.5V
- Super high density cell design for extremely low $R_{DS\ (ON)}$
- Exceptional on-resistance and maximum DC current capability
- SOT-23 package design

Product Description

LMN3414S, N-Channel enhancement mode MOSFET, uses Advanced Trench Technology to provide excellent $R_{DS(ON)}$, low gate charge.

These devices are particularly suited for low voltage power management, such as smart phone and notebook computer and other battery powered circuits, and low in-line power loss are needed in commercial industrial surface mount applications.

Applications

- Portable Equipment
- Battery Powered System
- Net Working System

Pin Configuration

LMN3414SZF(SOT-23)

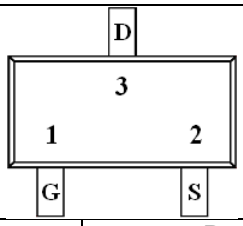

PIN	Description
1	Gate
2	Source
3	Drain

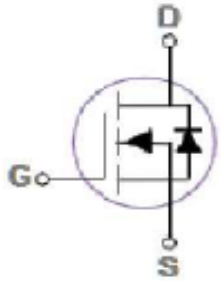

Notice: The information in this document is subject to change without notice.

Ordering Information

Ordering Information					
Part Number	P/N	PKG code	Pb Free code	Package	Quantity
LMN3414SZF	LMN3414S	Z	F	SOT-23	3000 PCS

Marking Information

Marking Information		
Part Marking	Part Number	LFC code
14XW	14	XW

Absolute Maximum Ratings

(T_C=25ºC Unless otherwise noted)

Symbol	Parameter		Typical	Unit
V_{DS}	Drain-Source Voltage		20	V
V_{GS}	Gate-Source Voltage		±10	V
I_D	Continuous Drain Current (T_J=150℃)	T_A=25ºC	5.8	A
		T_A=100ºC	3.7	
I_{DM}	Pulsed[1] Drain Current		23.2	A
P_D	Power Dissipation	T_A=25ºC	1.56	W
		T_A=25ºC	0.012	W/ ºC
T_J	Operating Junction Temperature		-55 to +150	ºC
T_{STG}	Storage Temperature Range		-55 to +150	ºC
$R_{\theta JA}$	Thermal Resistance-Junction to Ambient		80	ºC/W

Notice: The information in this document is subject to change without notice.

Electrical Characteristics

(T_C=25ºC Unless otherwise noted)

Symbol	Parameter	Conditions	Min	Typ	Max	Unit
Static						
$V_{(BR)DSS}$	Drain-Source Breakdown Voltage	V_{GS}=0V, I_D=250uA	20			V
$V_{GS(th)}$	Gate Threshold Voltage	V_{DS}=V_{GS}, ID=250Ua	0.4	0.6	0.8	V
	$V_{GS(th)}$ Temperature Coefficient			2		mV/ ºC
△BVDSS/ △TJ	BVDSS Temperature Coefficient	Reference to 25 ºC, ID=1mA		0.02		V/ºC
I_{GSS}	Gate Leakage Current	V_{DS}=0V, V_{GS}=±10V			±100	nA
I_{DSS}	Zero Gate Voltage Drain Current	V_{DS}=16V, V_{GS}=0V T_J=25℃			1	uA
		V_{DS}=16V, V_{GS}=0V T_J=85℃			10	
$R_{DS(on)}$	Drain-Source On-Resistance	V_{GS}=4.5V, ID=4A		20	25	mΩ
		V_{GS}=2.5V, ID=3A		27	35	
		V_{GS}=1.8V, ID=2A		39	55	
g_{FS}	Forward Transconductance	V_{DS}=10V, ID=3A		6.5		S
Dynamic						
I_S	Continuous Source Current	VD=VG=DV, Force Current			5.8	A
I_{SM}	Pulsed Source Current				23.2	
V_{SD}	Diode Forward Voltage	I_S=1A, V_{GS}=0V, TJ=25℃			1	V
Q_g	Total Gate Charge[2,3]	V_{DS}=10V, V_{GS}=4.5V, I_D=4A		7.7	11	nC
Q_{gs}	Gate-Source Charge[2,3]			0.9	1	
Q_{gd}	Gate-Drain Charge[2,3]			2.4	5	
C_{iss}	Input Capacitance	V_{DS}=10V, V_{GS}=0V, f=1MHz		535	775	pF
C_{oss}	Output Capacitance			60	85	
C_{rss}	Reverse Transfer Capacitance			34	50	
$t_{d(on)}$	Turn-On Time[2,3]	V_{DD}=10V, R_L=25Ω, I_D=1A, V_{GS}=4.5V,		4.1	8	ns
t_r				11.6	22	
$t_{d(off)}$	Turn-Off Time[2,3]			23.9	45	
t_f				7.6	14	

Note:

1. Repetitive Rating: Pulsed width limited by maximum junction temperature.
2. The data tested by pulsed, pulse width ≦ 300us, duty cycle ≦ 2%.
3. Essentially independent of operating temperature.

Notice: The information in this document is subject to change without notice.

Typical Performance Characteristics

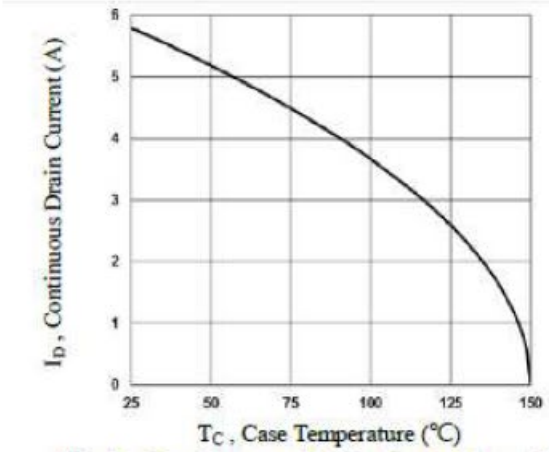

Fig.1 Continuous Drain Current vs. T_C

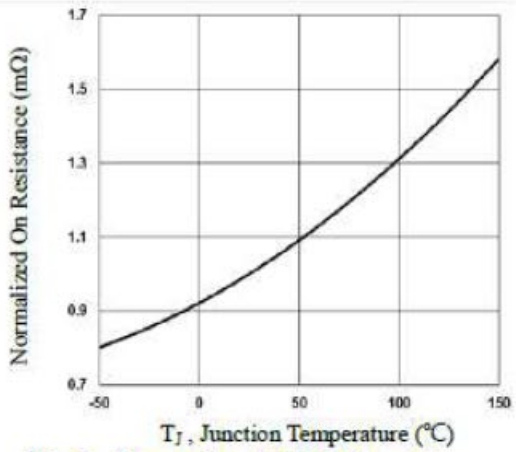

Fig.2 Normalized RDSON vs. T_J

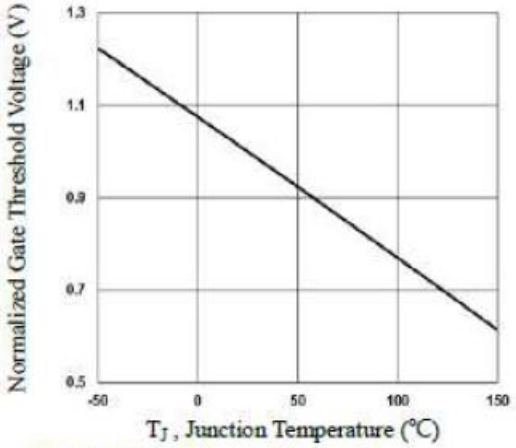

Fig.3 Normalized V_{th} vs. T_J

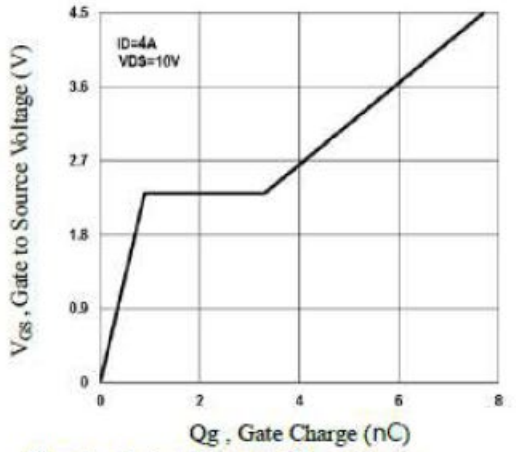

Fig.4 Gate Charge Waveform

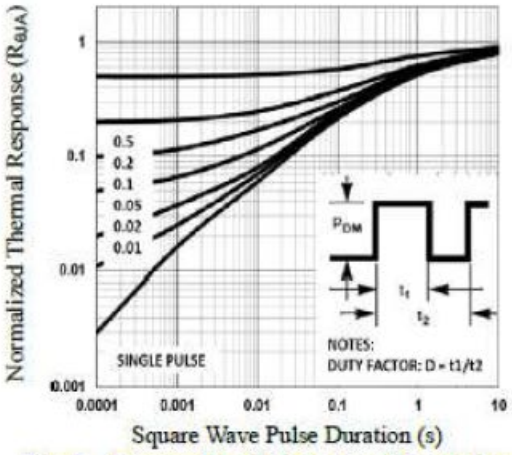

Fig.5 Normalized Transient Impedance

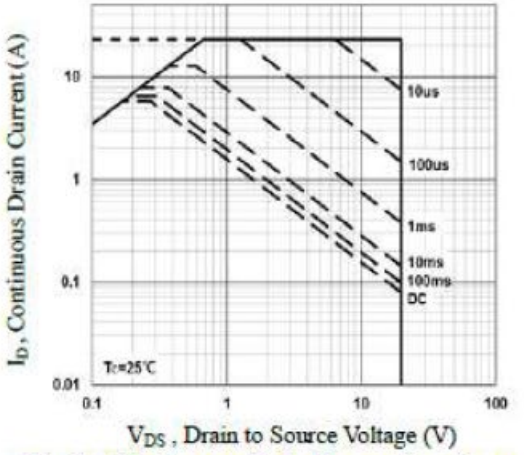

Fig.6 Maximum Safe Operation Area

Notice: The information in this document is subject to change without notice.

Typical Performance Characteristics(continue)

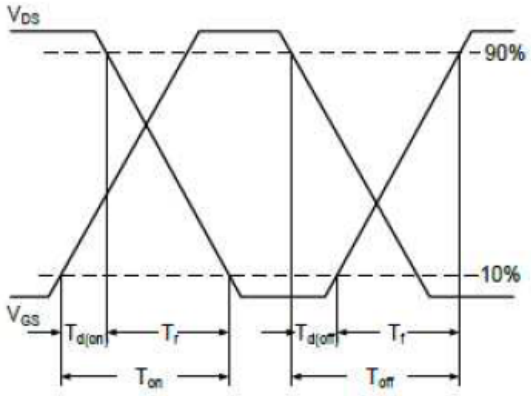

Fig.7 Switching Time Waveform

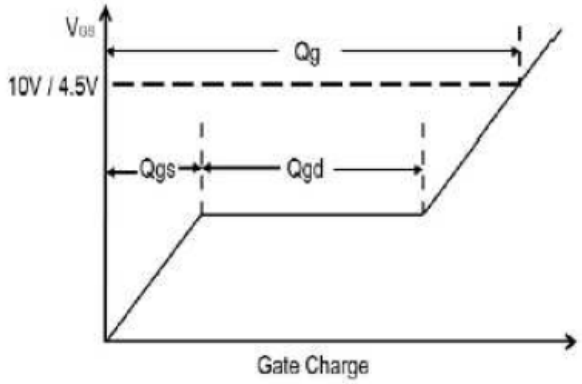

Fig.8 Gate Charge Waveform

Notice: The information in this document is subject to change without notice.

Package Dimension:

SOT23

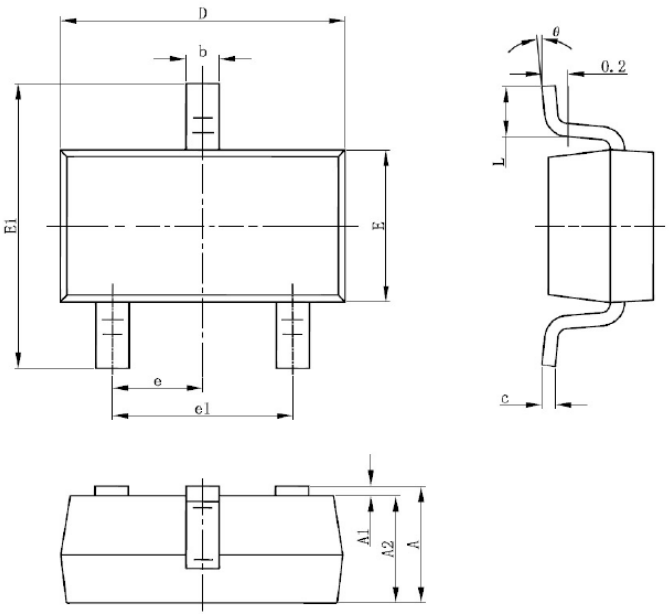

Dimensions				
Symbol	**Millimeters**		**Inches**	
	Min	Max	Min	Max
A	0.900	1.200	0.035	0.043
A1	0.000	0.100	0.000	0.004
A2	0.900	1.100	0.035	0.039
b	0.300	0.500	0.012	0.020
c	0.080	0.150	0.003	0.006
D	2.800	3.000	0.110	0.118
E	1.200	1.400	0.047	0.055
E1	2.250	2.550	0.089	0.100
e	0.950TYP		0.037TYP	
e1	1.800	2.000	0.071	0.079
L	0.550REF		0.022REF	
L1	0.300	0.500	0.012	0.020
θ	0°	8°	0°	8°

Notice: The information in this document is subject to change without notice.

NOTICE:

LFC Semiconductor assumes no responsibility for equipment failures that result from using products at values that exceed, even momentarily, rated values (such as maximum ratings, operating condition ranges, or other parameters) listed in products specifications of any and all LFC Semiconductor products described or contained herein. LFC Semiconductor products are not designed for use in life support appliances, devices or systems where malfunction of these products can be reasonably expected to result in personal injury. Reproduction in whole or in part is prohibited without the prior written consent of the copyright owner.

Applications shown on the herein document are examples of standard use and operation. Customers are responsible in comprehending the suitable use in particular applications. LFC Semiconductor makes no representation or warranty that such applications will be suitable for the specified use without further testing or modification.

Information furnished is believed to be accurate and reliable. However LFC Semiconductor assumes no responsibility for the consequences of use of such information nor for any infringement of patents or other rights of third parties, which may result from its use. No license is granted by implication or otherwise under any patent or patent rights of LFC Semiconductor. Specifications mentioned in this publication are subject to change without notice. This publication supersedes and replaces all information without express written approval of LFC Semiconductor.

Notice: The information in this document is subject to change without notice.