1.65V – 3.6V, 1x Low EMI Reduction IC

Features

- FCC approved method of EMI attenuation
- Proprietary "SaΦic™" technology, a non-PLL phase controlled Active EMI management architecture
- Generates a 1X low EMI Phase Modulated replication of the input signal.
- Input frequency range 20~27MHz
- Output frequency range
  - 1MHz to 200MHz @ 2.5V~3.3V
  - 1MHz to 125MHz @ 1.8V
- Multiple Deviation Selections
- Minimum frequency deviation selection capability
- Power Down Mode
- 8-pin WDFN package
- Supports automotive reliability standard: **AEC-Q100 Grade 1** and **Grade 2** certified

Product Description

The LX606 is a versatile 1x Active EMI management IC designed to provide system wide reduction of Electromagnetic Interference (EMI) and Radio Frequency Interference (RFI) from clock and data sources. The LX606 allows significant system cost savings by reducing the number of circuit board layers, ferrite beads, shielding and other passive components that are traditionally required to pass EMI regulations. The LX60x family of mobile active EMI management ICs is unique in it's design and is based on LFC's proprietary "SaΦic" phase controlled Active EMI management technology. This allows operation on aperiodic as well periodic signals. By the precise placement of the edges of the reconstructed input signal, the peak energy of the output is distributed over a wider and controlled energy band thereby significantly lowering system EMI compared to the typical narrow band signal produced by oscillators and most frequency generators.

The LX606 has an ouput frequency range of 1 MHZ to 125MHz/200MHz over a wide voltage range of 1.65V to 3.6V. The device can be placed in a " non-modulated clock mode" by setting the SSEN pin to GND where sets the MODOUT pin to no modulated clock output.

The device is available in an 8 pin DFN package.

Applications

The LX606 is targeted towards mobile platforms such as cell phones, MIDs, notebooks and other "power and space" sensitive applications.

Block Diagram

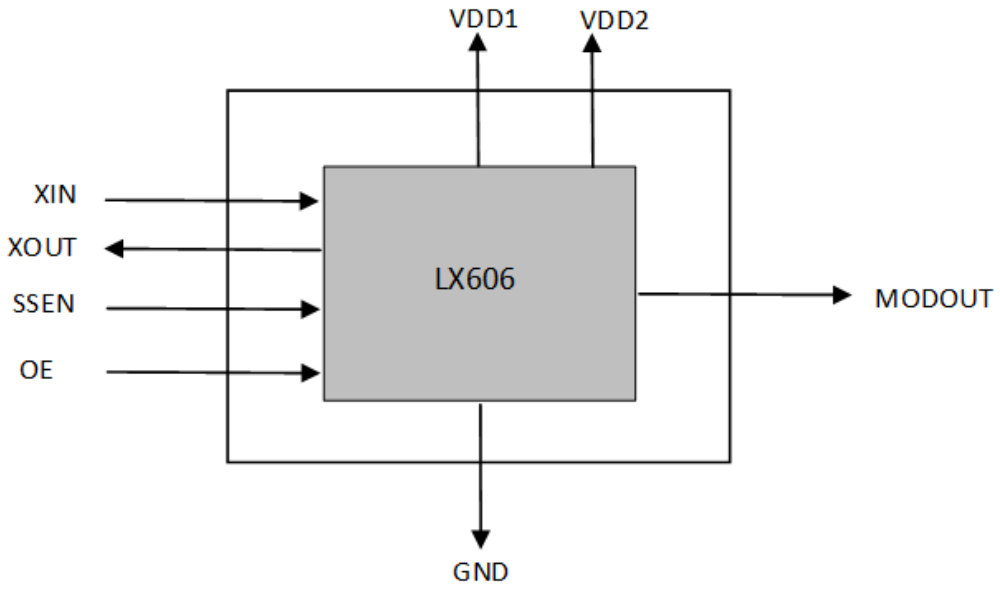

Notice: The information in this document is subject to change without notice.

Pin Configuration

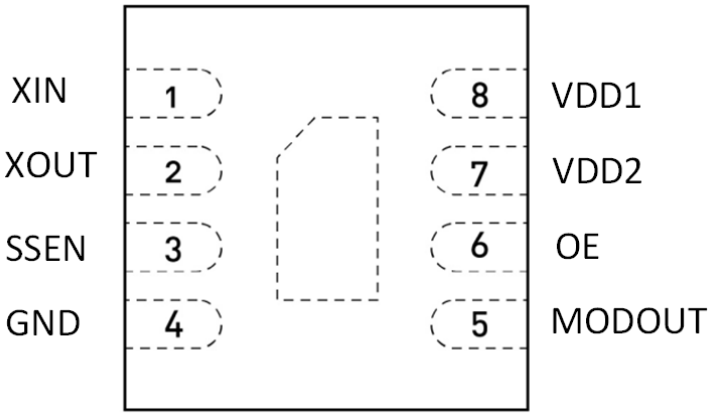

Pin Description

Pin#	Pin Name	Typ	Description
1	XIN	I	Crystal Oscillator Input.
2	XOUT	O	Crystal Oscillator Output.
3	SSEN	I	Modulated Clock Output if Pull-Up. No Modulated Clock Output if Pull-Down. Internal Pull-Up Resistor.
4	VSS	P	System ground reference input.
5	MODOUT	O	phase modulated buffered output.
6	OE	O	Clock output if Pull-Up. Hi-Z Output if Pull-Down. Internal Pull-Up Resistor
7	VDD2	P	System Power Supply pin.
8	VDD1	P	System Power Supply pin.

Operating Conditions

Parameter	Descriptio	Min	Max	Unit
V_{DD1}	Supply Voltage	1.65	1.95	V
V_{DD2}	Supply Voltage	1.65	3.6	V
T_A	Operating Temperature (Ambient Temperature)	-40	+125	°C
C_L	Load Capacitance		20	pF
C_{IN}	Input Capacitance		5	pF

Note : Please refer to ordering information for TA

Absolute Maximum Rating

Symbol	Parameter	Rating	Unit
V_{in}	Voltage on any pin with respect to Ground	-0.5 to +4.6	V
T_{STG}	Storage temperature	-65 to +125	°C
T_s	Max. Soldering Temperature (10 sec)	260	°C
T_J	Junction Temperature	150	°C
T_{DV}	Static Discharge Voltage (As per JEDEC STD22- A114-B)	2	KV
Note: These are stress ratings only and are not implied nor guaranteed for functional use. Exposure to absolute maximum ratings for prolonged periods of time may affect device reliability.			

Notice: The information in this document is subject to change without notice.

Functional Table

Input Freq. (MHz)	Output Freq. (MHz)	Deviation (%)	
		A	B
20	1~125MHz @VDD2=1.8V 1~200MHz @VDD2=3.3V	±0.19	±0.45
24		±0.21	±0.48
25		±0.22	±0.49
26		±0.24	±0.50
27		±0.25	±0.50

Note: Specified at VDD1=1.8V & VDD2=1.8V/3.3V and room temperature. Frequency deviation can vary over voltage and temperature by +/-20%.

DC Electrical Characteristics (VDD1=1.8V +/-0.15V & VDD2=3.3V +/-0.3V)

Parameter	Description	Test Conditions	Min	Typ	Max	Unit
VDD1	Supply Voltage		1.65	1.8	1.95	V
VDD2	Supply Voltage		3.0	3.3	3.6	V
V_{IH}	Input HIGH Voltage		0.66*Vdd			V
V_{IL}	Input LOW Voltage				0.33*Vdd	V
I_{IH}	Input HIGH Current (pin 3 and 6)	$V_{IN} = V_{DD}$			10	µA
I_{IL}	Input LOW Current (pin 3 and 6)	V_{IN} = 0V			10	µA
V_{OH}	Output HIGH Voltage	I_{OH} = -8mA	0.75*Vdd			V
V_{OL}	Output LOW Voltage	I_{OL} = +8mA			0.25*Vdd	V
I_{DD}	Dynamic Supply Current	Unloaded		27		mA
		15pF load		30		
Z_o	Output Impedance			25		Ω

Switching Characteristics (VDD1/1.8V +/-0.15V & VDD2/3.3V +/-0.3V)

Paramete	Description	Test Conditions	Min	Typ	Max	Unit
INPUT	Input Frequency		20	24	30	MHz
MODOUT	Output Frequency		1	–	200	
T_d	Duty Cycle [1,2] = $(t_2 / t_1) * 100$	Measured at $V_{DD}/2$	45	50	55	%
t_3	Output Rise Time[2]	Measured between 20% to 80%	1.2	1.5	1.8	nS
t_4	Output Fall Time [2]	Measured between 80% to 20%	1.2	1.5	1.8	nS

Notes:
1. All parameters specified with 200MHz without loaded outputs and VDD1=1.8V & VDD2=3.3V.
2. Parameter is guaranteed by design and characterization. Not 100% tested in production.

Notice: The information in this document is subject to change without notice.

DC Electrical Characteristics (VDD1/1.8V +/-0.15V & VDD2/1.8 +/-0.15V)

Parameter	Description	Test Conditions	Min	Typ	Max	Unit
VDD1	Supply Voltage		1.65	1.8	1.95	V
VDD2	Supply Voltage		1.65	1.8	1.95	V
V_{IH}	Input HIGH Voltage		0.66*Vdd			V
V_{IL}	Input LOW Voltage				0.33*Vdd	V
I_{IH}	Input HIGH Current (pin 3 and 6)	$V_{IN} = V_{DD}$			10	µA
I_{IL}	Input LOW Current (pin 3 and 6)	V_{IN} = 0V			10	µA
V_{OH}	Output HIGH Voltage	I_{OH} = -4mA	0.75*Vdd			V
V_{OL}	Output LOW Voltage	I_{OL} = +4mA			0.25*Vdd	V
I_{DD}	Dynamic Supply Current	Unloaded		18		mA
		15pF load		20		
Z_o	Output Impedance			25		Ω

Switching Characteristics (VDD1/1.8V +/-0.15V & VDD2/1.8 +/-0.15V)

Parameter	Description	Test Conditions	Min	Typ	Max	Unit
INPUT	Input Frequency		20	24	30	MHz
MODOUT	Output Frequency		1	–	125	
T_d	Duty Cycle [1,2] = $(t_2 / t_1) * 100$	Measured at $V_{DD}/2$	45	50	55	%
t_3	Output Rise Time [1,2]	Measured between 20% to 80%	1.2	2.2	TBD	nS
t_4	Output Fall Time [1,2]	Measured between 80% to 20%	1.2	2.2	TBD	nS

Notes:
1. All parameters specified with 200MHz without loaded outputs and V_{DD} 1.8V
2. Parameter is guaranteed by design and characterization. Not 100% tested in production

Duty Cycle Timing

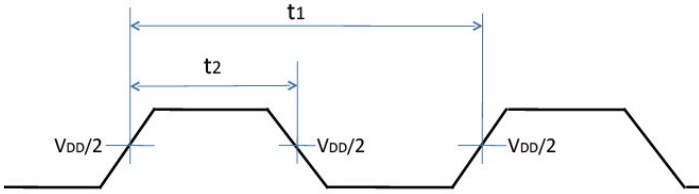

All Outputs Rise/Fall Time

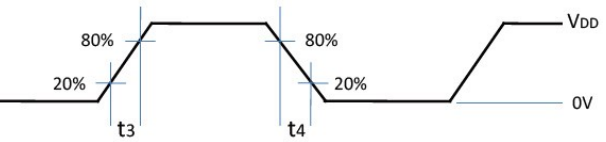

Notice: The information in this document is subject to change without notice.

Application Schematic

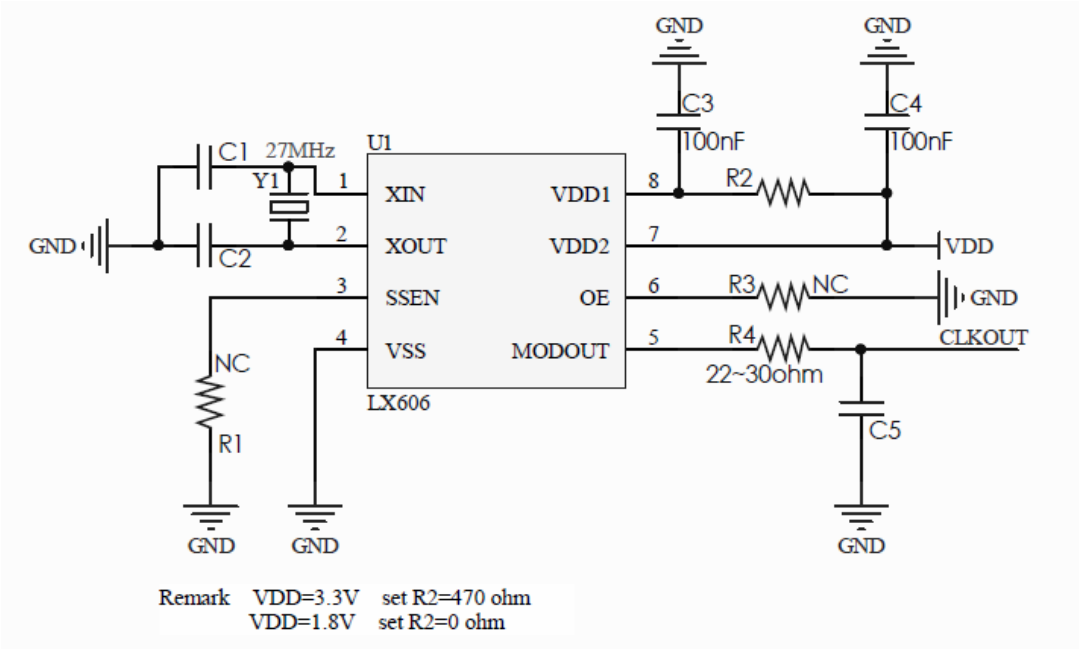

Crystal Oscillator Circuit

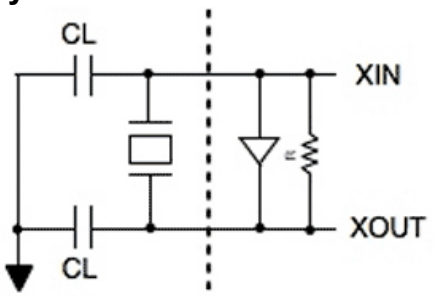

CL=2x(Cp-Cs)
Cp: load capacitance of Crystal
Cs: Stray capacitance (PCB trace + Input cap. of IC)

Marking Information

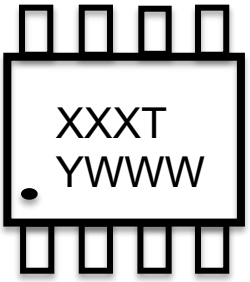

XXX: Part Number
T: Temperature Grade
Y: Year of Production
WWW: Work Order No.

Ordering Information

L X 6 0 6 I - 100M - 7 B

I	100M	7 B
Temperature Range: I: -40~85℃	Frequency: Ex: 100M	7: input freq 27M is "**7**"; B: refer to function table

Part Number	Temp. Grade Indicator	Temp Grade	Temp Range	IC Marking	IC Package	Tape & Reel
LX606I	I	Industrial	-40°~85°C	606I	2mm x 2mm	3,000pcs/Reel
LX606E	E	Automotive AEC Q100 Grade 2	-40°~105°C	606E	Contact with sales	
LX606A	A	Automotive AEC Q100 Grade 1	-40°~125°C	606A		

Notice: The information in this document is subject to change without notice.

Package Dimension
WDFN

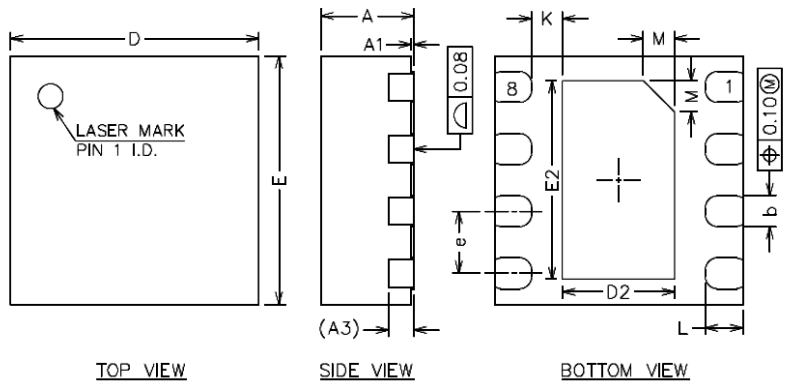

COMMON DIMENSIONS
(UNITS OF MEASURE=MILLIMETER)

SYMBOL	MIN	NOM	MAX
A	0.70	0.75	0.80
A1	0.00	0.02	0.05
A3		0.203REF	
b	0.20	0.25	0.30
D	1.90	2.00	2.10
E	1.90	2.00	2.10
D2	0.80	0.90	1.00
E2	1.50	1.60	1.70
e	0.40	0.50	0.60
K	0.15	0.25	0.35
L	0.25	0.30	0.35
M		0.25REF	

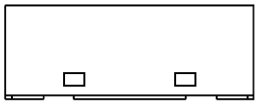

SIDE VIEW

NOTES:
ALL DIMENSIONS REFER TO JEDEC STANDARD MO-229
DO NOT INCLUDE MOLD FLASH OR PROTRUSIONS.

Revision History

Revision Number	Date of Release	Changes
1.0	11/21/22	1) Preliminary specification
1.2	02/23/24	1)modify the deviation data, and the dimension
1.3	03/13/24	1)updated the schematic
1.4	04/23/24	1)Add ordering information
1.5	05/28/24	1)updated deviation table information
1.6	07/10/24	1)updated input frequency range and order information
2.0	08/29/24	1)Modify the tape reel quantity

Notice: The information in this document is subject to change without notice.